16600PLAY

- NOTICE -
This playset product is not intended for public use. It is intended for residential application and is not warranted for public or commercial use.

Call Us First!
DO NOT RETURN TO STORE.

For immediate help with assembly or product information
call our toll-free number:
1-800-437-0784
April through October M - F 8:00 AM to 6:00 PM EST
Saturday 8:30 AM to 4:30 PM EST
November through March M - F 8:00 AM to 5:00 PM EST
or email:
customerservice@backyard-play.com
Our staff is ready to provide assistance.

(This page intentionally left blank.)

kid's creations
QUALITY REDWOOD SWING SETS

Circus Playset

16600PLAY

LDR: 4/4/2016

Recommended for ages 3 to 11

- BEFORE YOU BEGIN -

First...

- Check with your homeowner's association before assembling.
- Read instructions thoroughly before you begin. If you have purchased accessories to accompany this play set, please read all installation instructions before beginning assembly of this structure.

Check All Parts

- If a part is missing, circle the part in question and call 1-800-437-0784.

Adult Assistance required
Assistance is necessary to handle, fit, and secure some components.

Squareness is very Important!
Start with a level surface and keep 90° corners and 90° perpendiculars throughout the assembly to ensure all components fit together.

Safety!

- Check for protruding screws and bolts, verify all screw and bolt lengths during assembly.

Always wear OSHA-APPROVED safety glasses throughout assembly process.

Tools Required

- Level
- Hammer
- Star Drive Bit (included)
- Framing Square
- Tape Measure
- Drill
- Impact Driver
- Ladder
- Socket Set

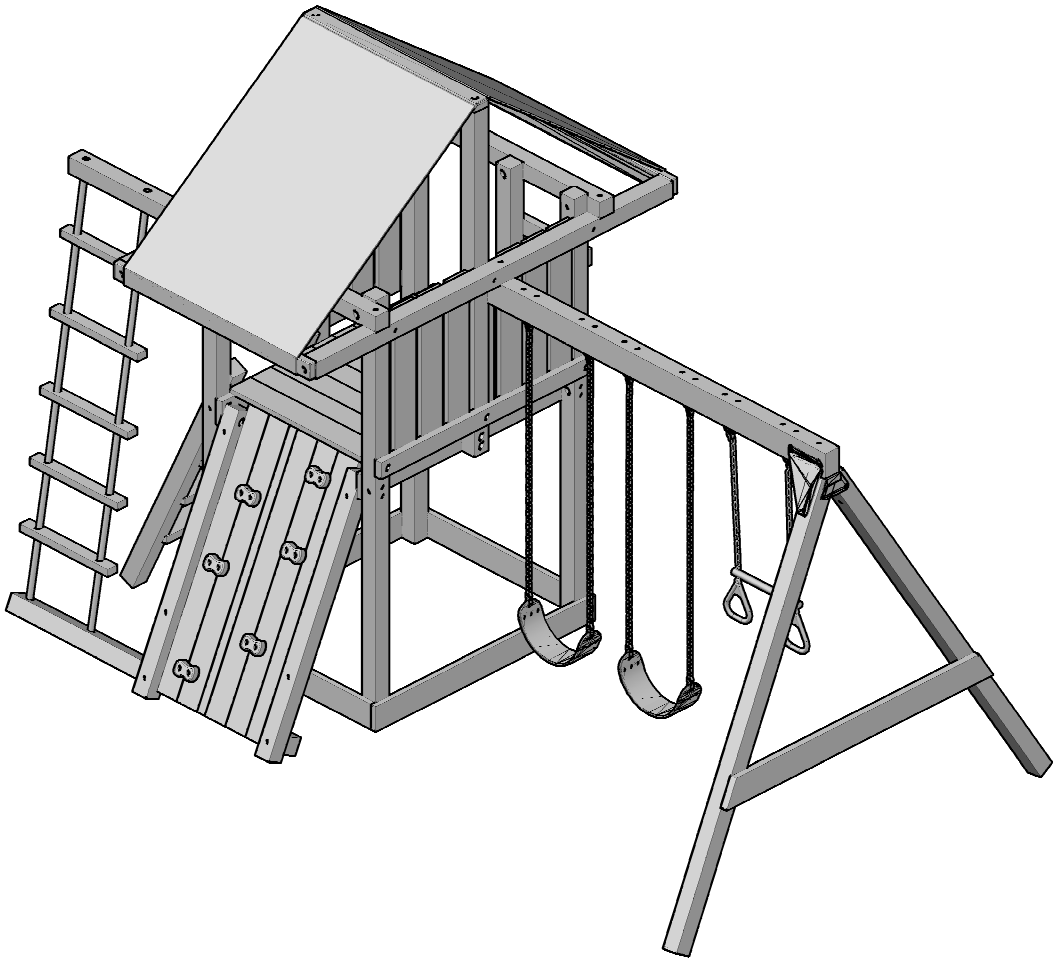

Note: Use this manual to assemble your base playset. Refer to manuals packed into other boxes for playset accessories. Your model may differ from the one shown .

ASSEMBLY SAFETY and HELPFUL HINTS

STOP! ***STOP!!!*** **Check all parts and hardware before beginning. If any parts are missing or damaged please circle and call the phone number listed.** STOP!

DO NOT CONTACT THE STORE OR RETURN YOUR PLAYSET !

KEEP THIS INSTALLATION MANUAL FOR FUTURE CARE AND MAINTENANCE REFERENCE.

To aid in making your playset assembly easier, here is a listing of some helpful hints.

- ❑ Wear safety glasses during drilling, assembly of your playset.
- ❑ Children should not be allowed in the playset assembly and build area.
- ❑ Note the hole orientation on parts to avoid having to take parts apart later.
- ❑ Some steps require the assistance of two people to ensure proper assembly, safety during assembly, as well as preventing any damage to the playset.

STOP! ***IMPORTANT HARDWARE INFORMATION*** STOP!

- ❑ All hex bolts and lag bolts require a lock washer or lock nut.
- ❑ To properly install lock nuts, two to three threads must protrude past the lock nut and be exposed once tightened.
- ❑ Make sure all fasteners used are as specified. Using a fastener not specified in a particular application may result in too much thread exposure or not enough thread engagement.
- ❑ **DO NOT OVERTIGHTEN LAG BOLTS**

NOTE: Attach all bolts as pictured below to prevent the bolt end from harming anyone.

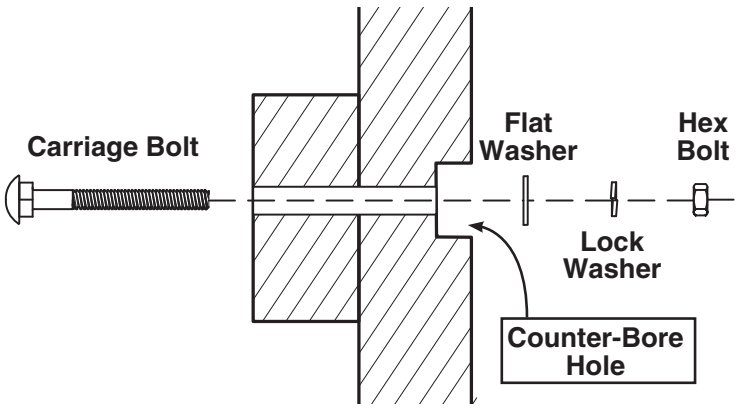

If any bolts protrude passed counter-bore, install thread cap as shown.

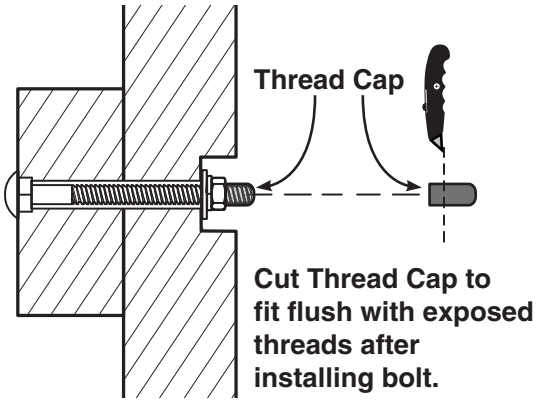

ASSEMBLY SAFETY and HELPFUL HINTS

STOP! **Please read carefully. Observing the following statements and warnings reduces the likelihood of serious or fatal injury.** STOP!

- ❑ This playset has been designed for use by a maximum of eight occupants at one time having a combined weight of 1,200 pounds. (This weight does not include occupants in the sandbox area.)
- ❑ This playset is recommended for children (3) through (11) years of age.
- ❑ On-site adult supervision for children of all ages is recommended.
- ❑ Instruct children not to walk close to, in front of, behind, or between moving items.
- ❑ Instruct children not to twist swing chains or ropes or loop them over the top support bar since this may reduce the strength of the chain or rope.
- ❑ Instruct children to avoid swinging empty seats.
- ❑ Teach children to sit in the center of the swings with their full weight on the seats.
- ❑ Instruct children not to use the equipment in a manner other than intended.
- ❑ Instruct children not to get off equipment while it is in motion.
- ❑ Parents should dress children appropriately (examples would include the use of well- fitting shoes and the avoidance of ponchos, scarves, and other loose-fitting clothing that is potentially hazardous while using equipment).
- ❑ Instruct children not to climb when the equipment is wet. Slippery surfaces may cause a hazard.
- ❑ Verify that suspended climbing ropes, chain, or cable are secured at both ends.
- ❑ Verify that suspended climbing ropes, chain, or cable cannot be looped back on itself.
- ❑ Instruct children not to attach items to the playground equipment that are not specifically designed for use with the equipment, such as, but not limited to, jump ropes, clothesline, pet leashes, cables and chain as they may cause a strangulation hazard.
- ❑ Instruct children to remove their bike or other sports helmet before playing on the playground equipment.
- ❑ Instruct children to not walk or run up slides.
- ❑ Instruct children to not pick up slides or ramps as this may cause damage or breakage.
- ❑ Place the equipment on level ground not less than six (6) feet from any obstructions. Be sure to look overhead for any obstructions above the playset.
- ❑ Do not use the equipment until fully erected per this playset instruction manual, bolts tightened and the playset is anchored to the ground.

NOTICE:

This playset product is not intended for public use. It is intended for residential application and is not warranted for public or commercial use.

MAINTENANCE

Periodic maintenance is required to ensure safe enjoyment of your playset and optional accessories. Observing the following procedures reduces the likelihood of serious or fatal injury.

- ❑ **Activity on your playset and optional accessories may loosen fasteners. Check all lock nuts, hex and lag bolts, quick clips, spring clips, acorn nuts, wood screws, and swing hangers for tightness and tighten as required. T-nuts should be inspected for full and proper seating into the wood.**

- ❑ Checking, splitting and surface cracking are characteristics of all wooden playsets. This is caused by varying seasonal temperatures and moisture conditions. To minimize this checking and/or cracking you may coat your playset with a water repellent.

PLAYSET CHECKLIST

At the beginning of each play season:

- ☐ Tighten all hardware.
- ☐ Lubricate all metallic moving parts per manufacturer's instructions.
- ☐ Check all protective coverings on bolts, pipes, edges, and corners. Replace if they are loose, cracked, or missing.
- ☐ Check all moving parts including swing seats, ropes, cables, and chains for wear, rust, or other deterioration. Replace as needed.
- ☐ Check metal parts for rust. If found, sand and repaint using a nonleaded-based paint meeting the requirements of 16 CFR 1303.
- ☐ Check all wood members for deterioration and splinters. Sand down splinters and replace deteriorating wood members.
- ☐ Reinstall any plastic parts, such as swing seats or any other items that were removed for the cold season.
- ☐ Rake and check depth of loose fill protective surfacing materials to prevent compaction and to maintain appropriate depth. Replace as necessary.

Twice a month during play season:

- ☐ Tighten all hardware.
- ☐ Check all protective coverings on bolts, pipes, edges, and corners. Replace if they are loose, cracked, or missing.
- ☐ Rake and check depth of loose fill protective surfacing materials to prevent compaction and to maintain appropriate depth. Replace as necessary.

Once a month during play season:

- ☐ Lubricate all metallic moving parts per manufacturer's instructions.
- ☐ Check all moving parts including swing seats, ropes, cables, and chains for wear, rust, or other deterioration. Replace as needed.
- ☐ At the end of each play season or when the temperature drops below 10°F remove plastic swing seats, tents, sandbox cover, tire swing, slide and other items as specified by the manufacturer and take indoors or do not use.
- ☐ Rake and check depth of loose fill protective surfacing materials to prevent compaction and to maintain appropriate depth.Replace as necessary.

When you are ready to dispose of your playset, make sure that all metal, plastic and wood components are disposed of in accordance with local waste ordinances.

Buyer and/or owner should disassemble and dispose of the playground equipment in such a way that no unreasonable hazards will exist at the time the swing set is discarded.

PLAYGROUND SURFACING MATERIALS

SECTION 4 OF THE CONSUMER PRODUCT SAFETY COMMISSION'S OUTDOOR HOME PLAYGROUND SAFETY HANDBOOK[9]

Select Protective Surfacing

One of the most important things you can do to reduce the likelihood of serious head injuries is to install shock-absorbing protective surfacing under and around your play equipment. The protective surfacing should be applied to a depth that is suitable for the equipment height in accordance with ASTM Specification F 1292. There are different types of surfacing to choose from; whichever product you select, follow these guidelines:

NOTE: Do not install home playground equipment over concrete, asphalt, or any other hard surface. A fall onto a hard surface can result in serious injury to the equipment user. Grass and dirt are not considered protective surfacing because wear and environmental factors can reduce their shock absorbing effectiveness. Carpeting and thin mats are generally not adequate protective surfacing. Ground level equipment – such as a sandbox, activity wall, playhouse or other equipment that has no elevated play surface – does not need any protective surfacing.

Maximum fall height for this playset is 80".

Loose-Fill Materials:

- ❑ Maintain a minimum depth of 9 inches of loose- fill materials such as wood mulch/chips, engineered wood fiber (EWF), or shredded/recycled rubber mulch for equipment up to 8 feet high; and 9 inches of sand or pea gravel for equipment up to 5 feet high. NOTE: An initial fill level of 12 inches will compress to about a 9- inch depth of surfacing over time. The surfacing will also compact, displace, and settle, and should be periodically refilled to maintain at least a 9- inch depth.
- ❑ Use a minimum of 6 inches of protective surfacing for play equipment less than 4 feet in height. If maintained properly, this should be adequate. (At depths less than 6 inches, the protective material is too easily displaced or compacted.)
- ❑ Use containment, such as digging out around the perimeter and/or lining the perimeter with landscape edging. Don't forget to account for water drainage. U.S Consumer Product Safety Commission, Washington, D.C., 20207 or call the toll-free hotline :1-800-638-2772
- ❑ Check and maintain the depth of the loose-fill surfacing material. To maintain the right amount of loose-fill materials, mark the correct level on play equipment support posts. That way you can easily see when to replenish and/or redistribute the surfacing.
- ❑ **Do not** install loose fill surfacing over hard surfaces such as concrete or asphalt.

Poured-In-Place Surfaces or Pre-Manufactured Rubber Tiles:

You may be interested in using surfacing other than loose-fill materials – like rubber tiles or poured-in-place surfaces.

- ❑ Installations of these surfaces generally require a professional and are not "do-it-yourself" projects.
- ❑ Review surface specifications before purchasing this type of surfacing. Ask the installer/manufacturer for a report showing that the product has been tested to the following safety standard: ASTM F 1292 Standard Specification for Impact Attenuation of Surfacing Materials within the Use Zone of Playground Equipment. This report should show the specific height for which the surface is intended to protect against serious head injury. This height should be equal to or greater than the fall height – vertical distance between a designated play surface (elevated surface for standing, sitting, or climbing) and the protective surfacing below – of your play equipment.
- ❑ Check the protective surfacing frequently for wear.

Placement

Proper placement and maintenance of protective surfacing is essential. Be sure to

- ❑ Extend surfacing at least 6 feet from the equipment in all directions.
- ❑ For to-fro swings, extend protective surfacing in front of and behind the swing to a distance equal to twice the height of the top bar from which the swing is suspended.
- ❑ For tire swings, extend surfacing in a circle whose radius is equal to the height of the suspending chain or rope, plus 6 feet in all directions.

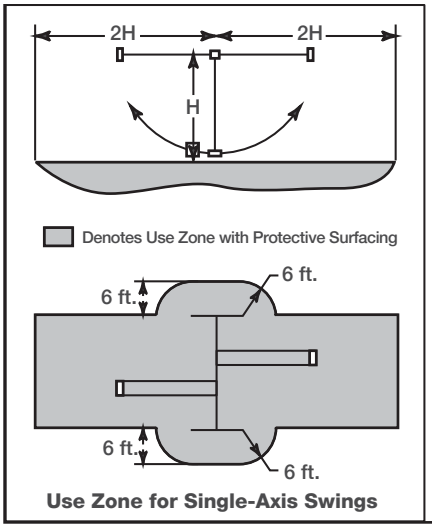

Use Zone for Single-Axis Swings

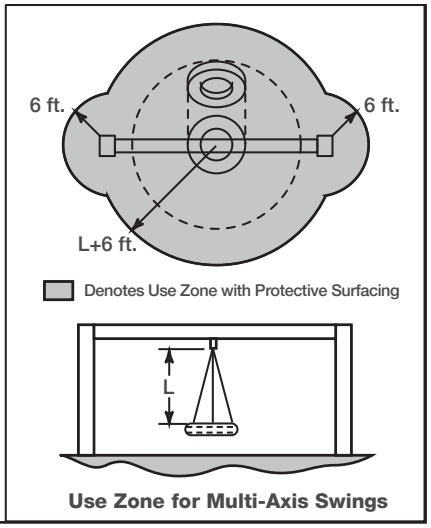

Use Zone for Multi-Axis Swings

9 **This information has been extracted from the CPSC publications "Playground Surfacing—Technical Information Guide" and "Handbook for Public Playground Safety." Copies of these reports can be obtained by sending a postcard to the: Office of Public Affairs, U.S. Consumer Product Safety Commission, Washington, D.C., 20207 or call the toll-free hotline: 1-800-638-2772**

BASE PARTS LIST

NOTE: Each wood part is stamped with part identification number.

1-1/2 x 3-1/2 x 20"

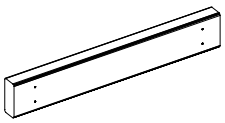

214 x2

1-1/2 x 3-1/2 x 23-3/4"

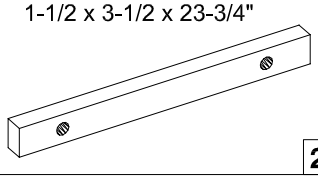

213 x5

1-1/2 x 3-1/2 x 30-1/4"

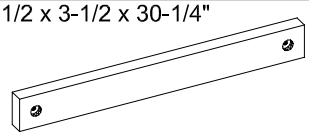

88 x1

3-1/2 x 3-1/2 x 39-1/8"

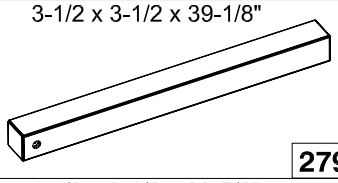

279 x1

1 x 5-1/2 x 35"

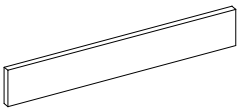

161 x9

1 x 5-1/2 x 39-3/4"

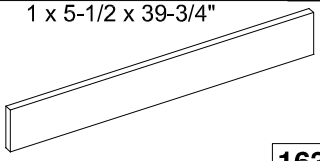

163 x10

1-1/2 x 3-1/2 x 23-5/8"

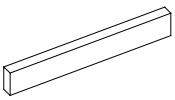

12 x1

1-1/2 x 5-1/2 x 47"

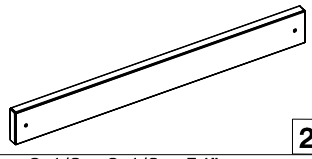

207 x1

1-1/2 x 5-1/2 x 51"

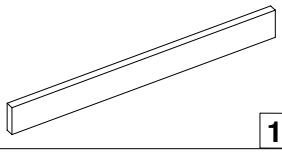

175 x1

1 x 5-1/2 x 47"

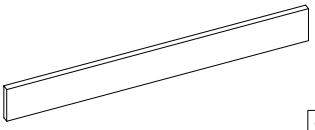

158 x2

3-1/2 x 3-1/2 x 54"

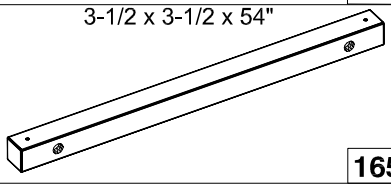

165 x1

1 x 5-1/2 x 59"

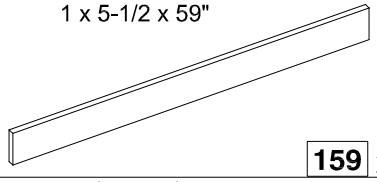

159 x7

1-1/2 x 5-1/2 x 57"

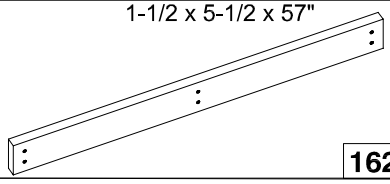

162 x2

1-1/2 x 3-1/2 x 57"

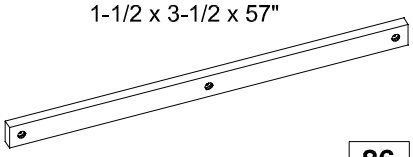

86 x1

1-1/2 x 3-1/2 x 37"

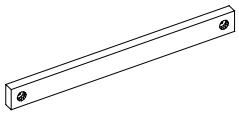

129 x1

1 x 2 x 59"

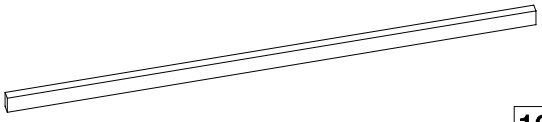

160 x1

3-1/2 x 3-1/2 x 59-1/4"

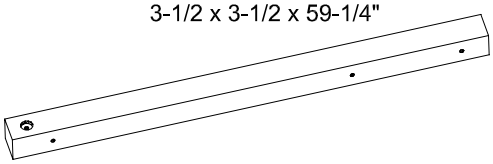

109 x2

3-1/2 x 3-1/2 x 95-3/4"

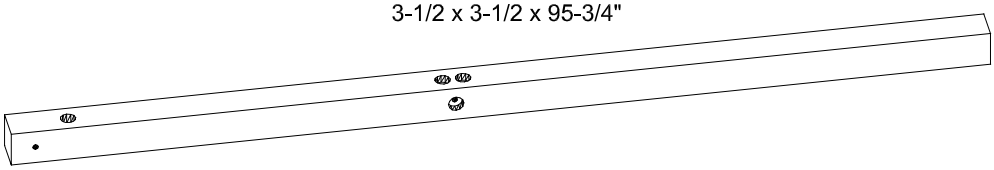

173 x4

3-1/2 x 3-1/2 x 96"

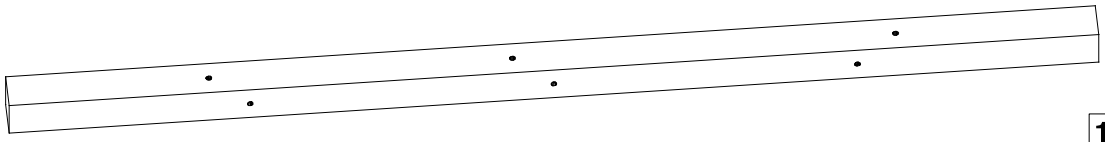

111 x2

3-1/2 x 3-1/2 x 83-3/4"

113 x1

1-1/2 x 3-1/2 x 35"

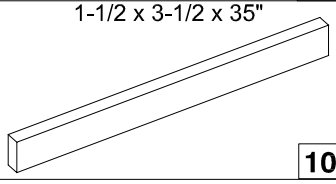

106 x1

3-1/2 x 3-1/2 x 75-1/2"

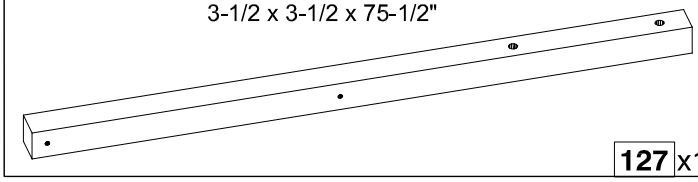

127 x1

3-1/2 x 3-1/2 x 77-1/4"

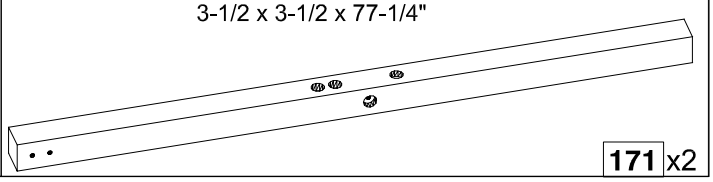

171 x2

BASE PARTS LIST

1 x 5-1/2 x 71-3/4"

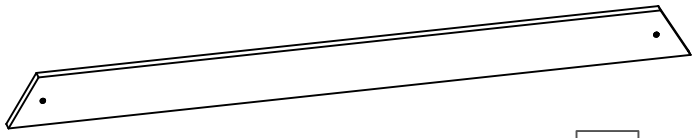

168 x1

1-1/2 x 3-1/2 x 22-1/2"

195 x1

3-1/2 x 3-1/2 x 95-3/4"

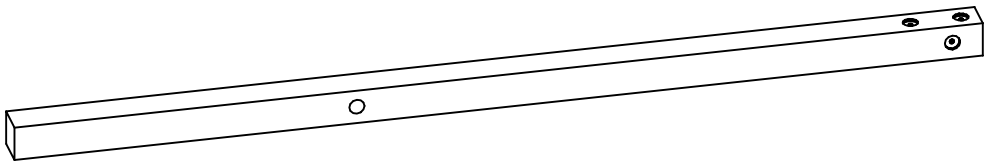

167 x2

3-1/2 x 5-1/2 x 95-3/4"

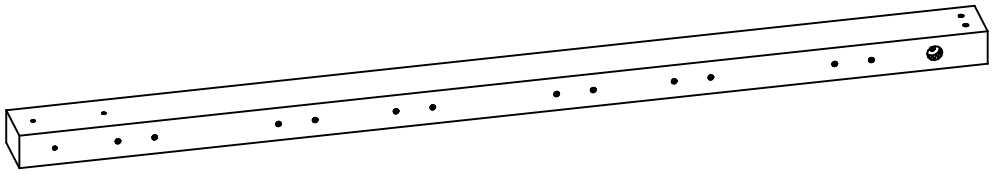

166 x1

Ladder

IMPORTANT!
IF PARTS NEED TO BE REPLACED ON SUB-ASSEMBLED LADDER MAKE SURE TO HAVE THE DIMENSIONS OF THE PARTS AS THEY DO VARY WITH LADDER ASSEMBLIES.

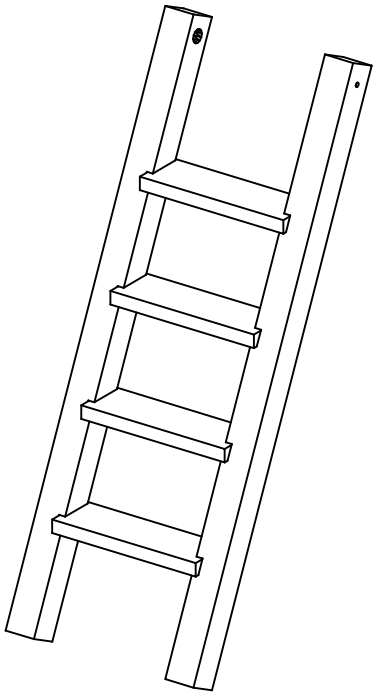

3117 or 3117S x1

16" REBAR STAKE WITH 2-1/2" LAG

2601-A or WS 4522 x4

1-1/2 x 3-1/2 x 11"

189 x1

ACCESSORIES/HARDWARE

Swing Hanger

WS 4889 x6

Quick clip

x6

Safety Handles

WS 4410 x4

Climbing Rocks

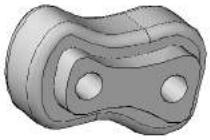

Rock Hardware

x6

WS 4541 x6

Steering Wheel

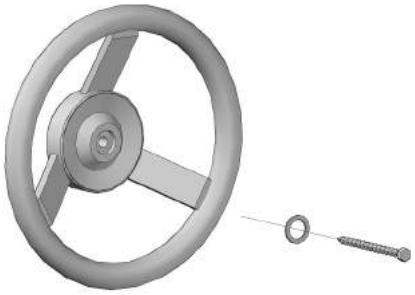

WS 4412 x1

Telescope

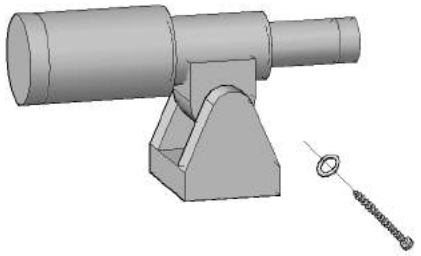

2453 x1

Tic Tac Toe

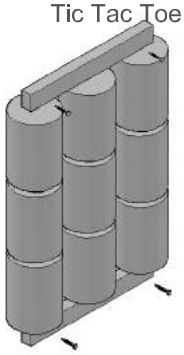

2470 x1

Belt Swing

2097 x2

Slide

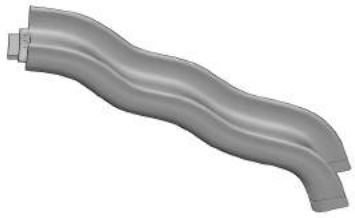

2442 x1

15' Rope

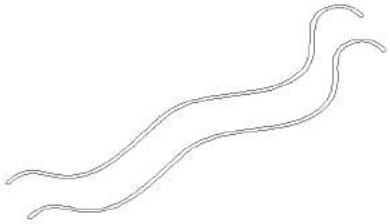

SA 3099 x2

Nameplate

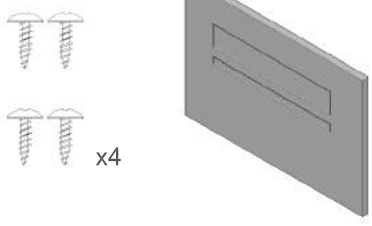

x4

2499 x1

Trapeze

WS 2435 x1

Swing Plate (Left)

2448 x1

Swing Plate (Right)

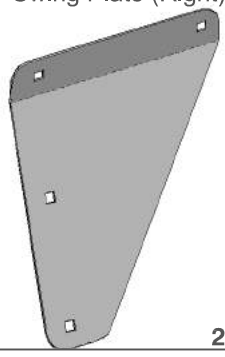

2447 x1

Swing Plate at A- Frame

2449 x1

FASTENER/HARDWARE IDENTIFICATION (Shown Actual Size)

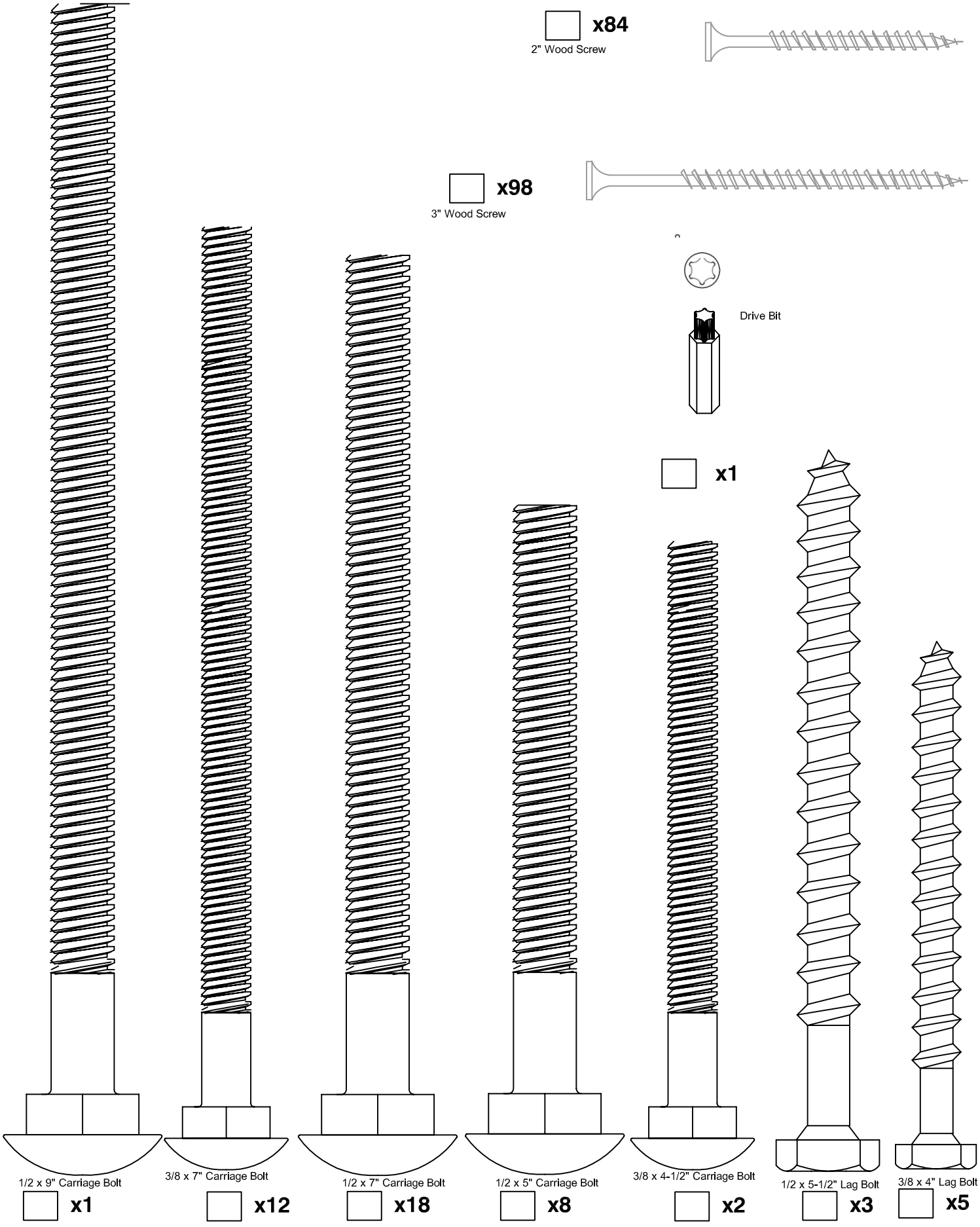

FASTENER/HARDWARE IDENTIFICATION (Shown Actual Size)

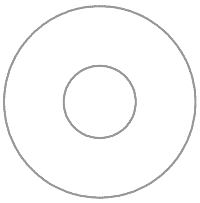

3/8" Flat Washer

☐ **x28**

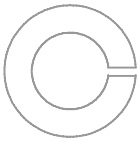

3/8" Lock Washer

☐ **x5**

3/8" Lock Nut

☐ **x21**

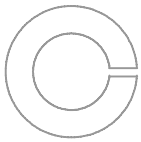

1/4" Lock Washer

☐ **x2**

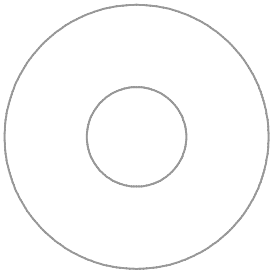

1/2" Flat Washer

☐ **x43**

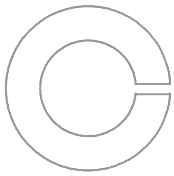

1/2" Lock Washer

☐ **x43**

1/2" Hex Nut

☐ **x39**

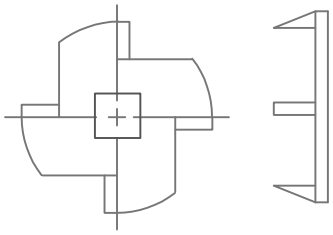

3/8" Torque Washer

☐ **x14**

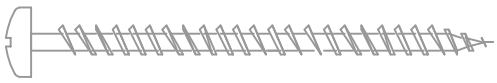

☐ **x2** 2-1/2" Screw

☐ **x3** 1-1/2" Screw

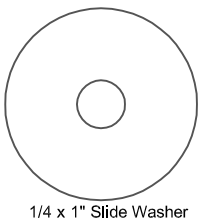

1/4 x 1" Slide Washer

☐ **x3**

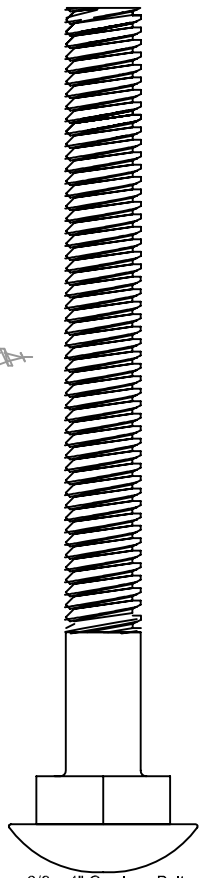

3/8 x 4" Carriage Bolt

☐ **x6**

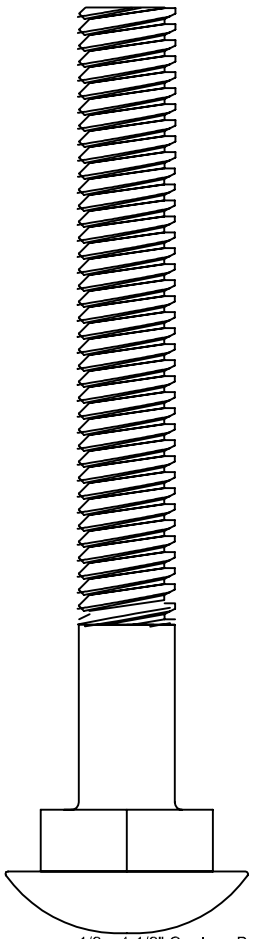

1/2 x 4-1/2" Carriage Bolt

☐ **x8**

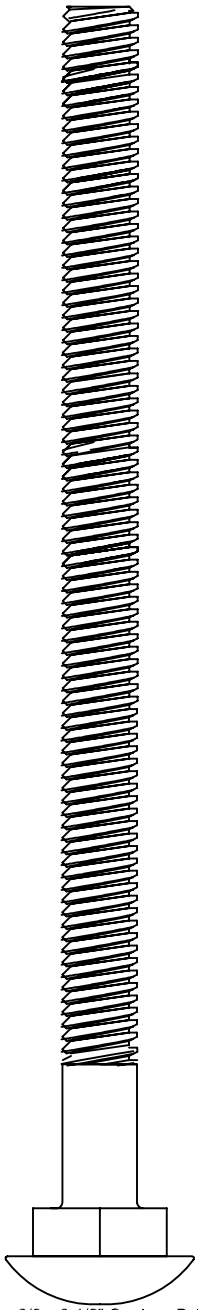

3/8 x 6-1/2" Carriage Bolt

☐ **x1**

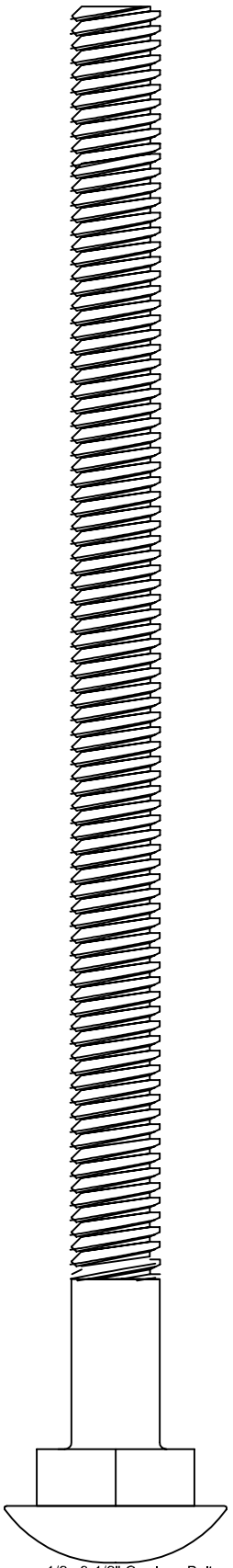

1/2 x8-1/2" Carriage Bolt

☐ **x2**

BASE SAFETY ZONE

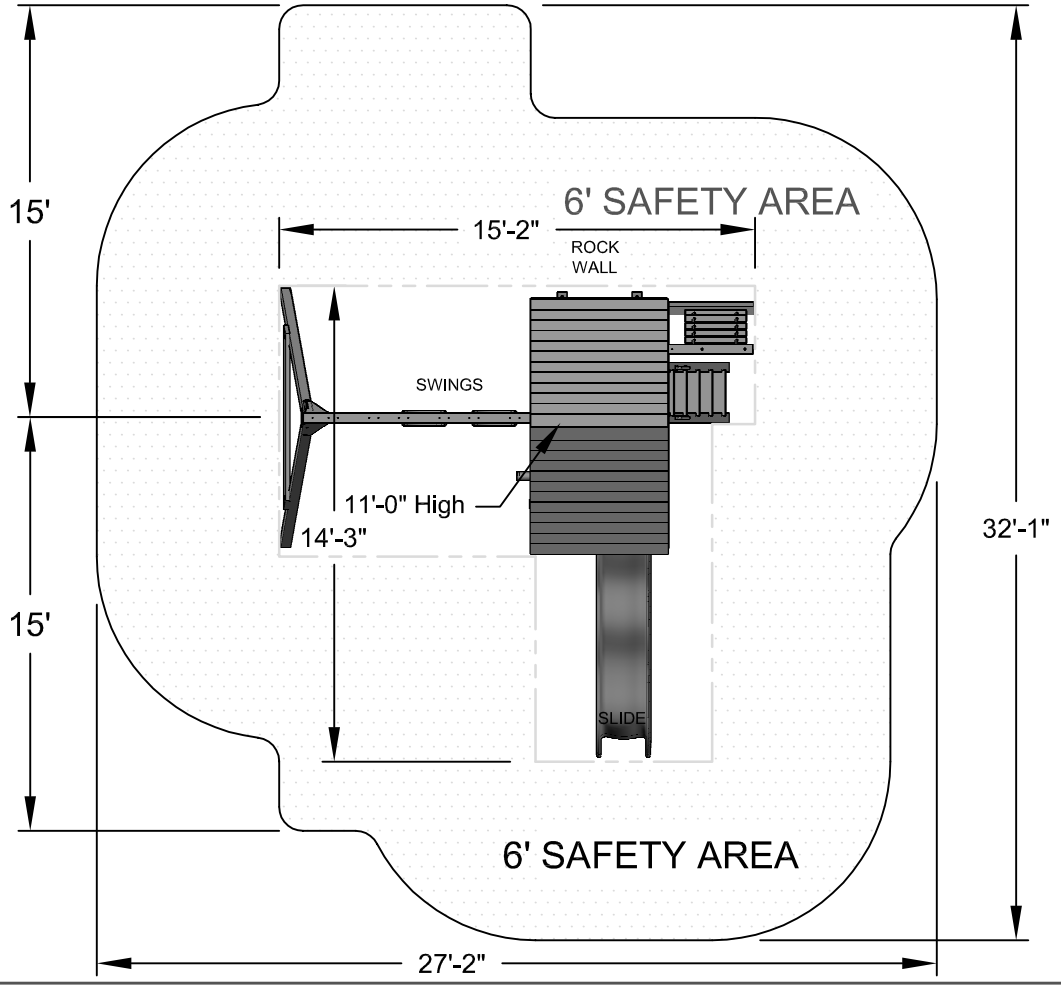

SAFETY ZONE w/ MONKEY BARS

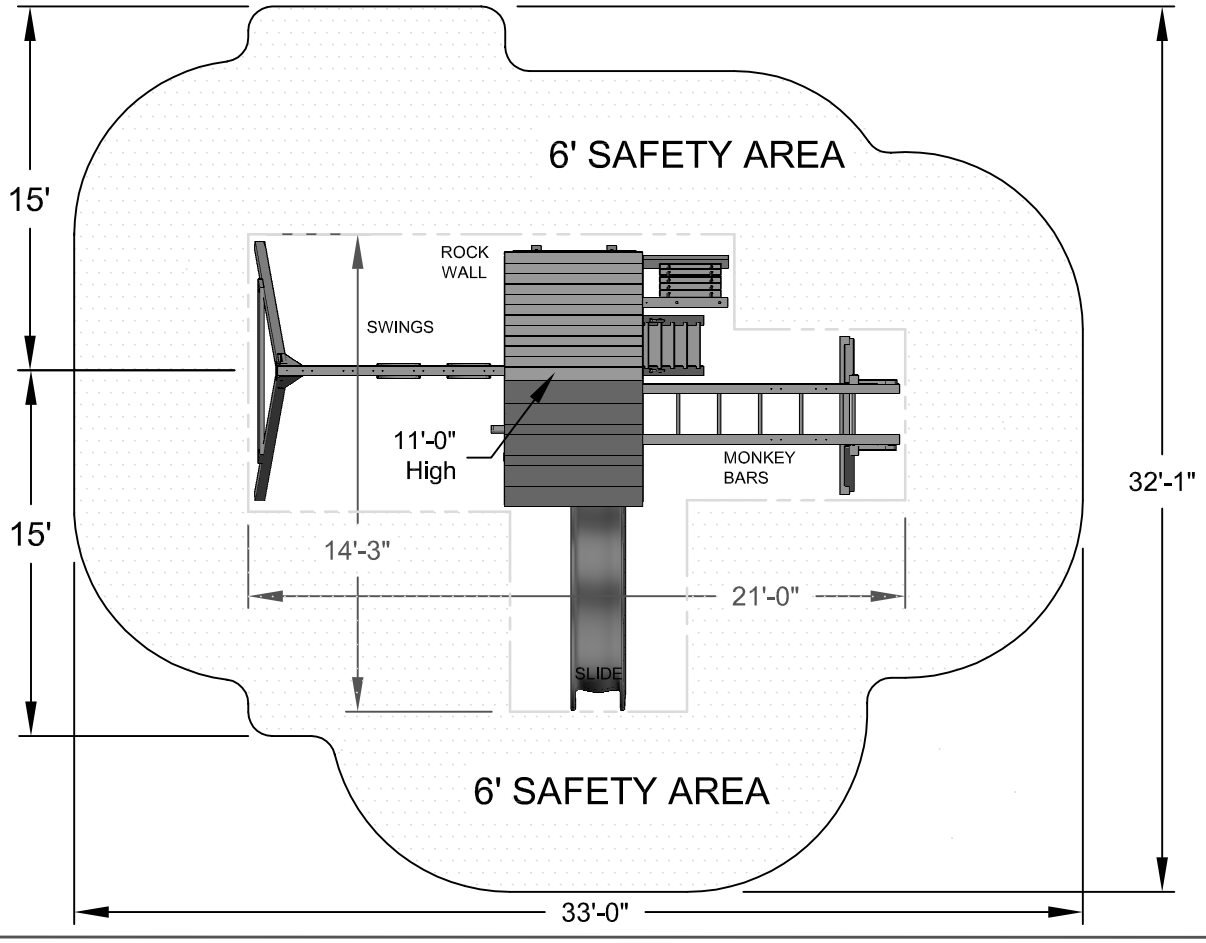

TOWER ASSEMBLY

PARTS REQUIRED:
(2) 171 Canopy Upright
(2) 159 Sandbox Board
(2) 162 Decking Support
(4) 173 Tower Legs

x12 S3 — 3" Wood Screw

x2 C12 — 1/2" x 4-1/2" Carriage Bolt

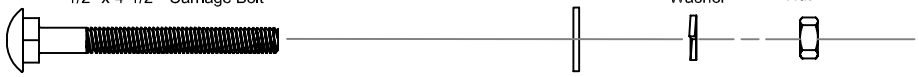

x4 C5 — 1/2" x 5" Carriage Bolt

x2 Build two assemblies exactly the same.

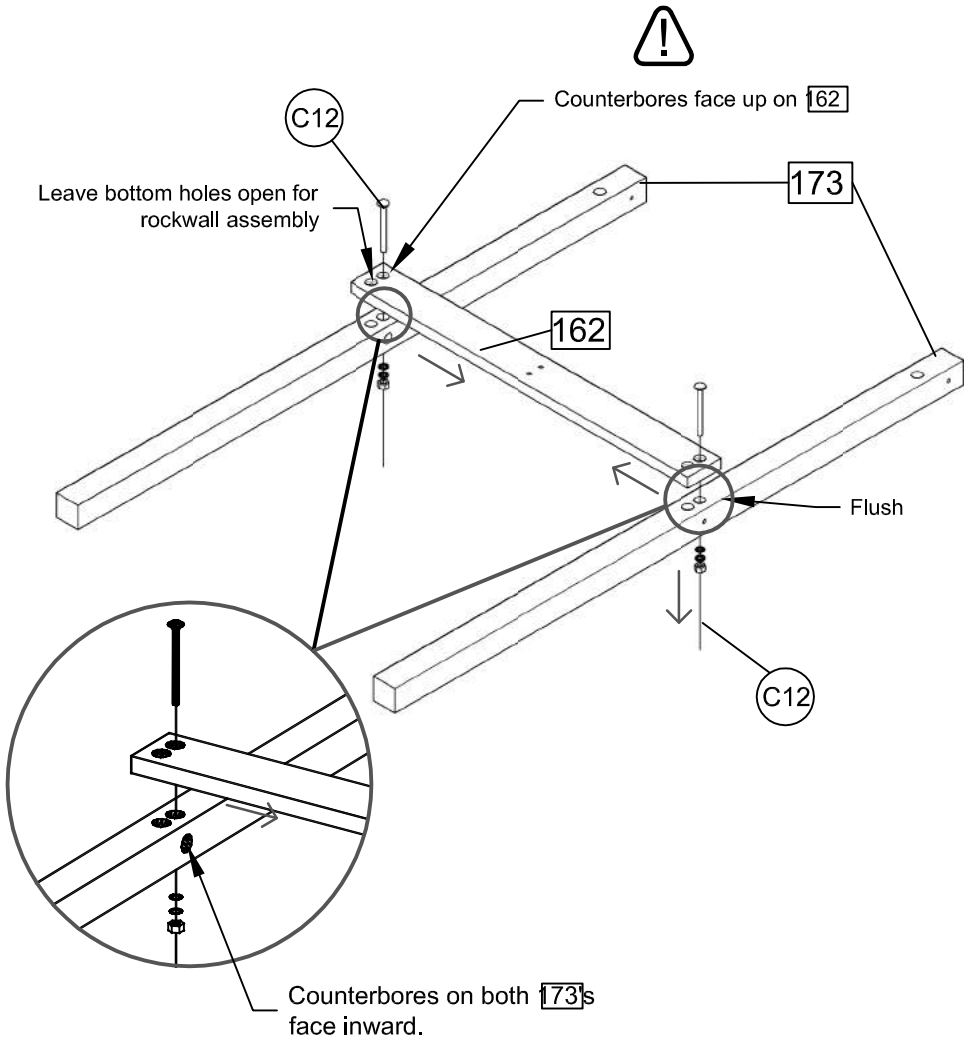

x2 Flip the assembly over.

Square wall when installing 159

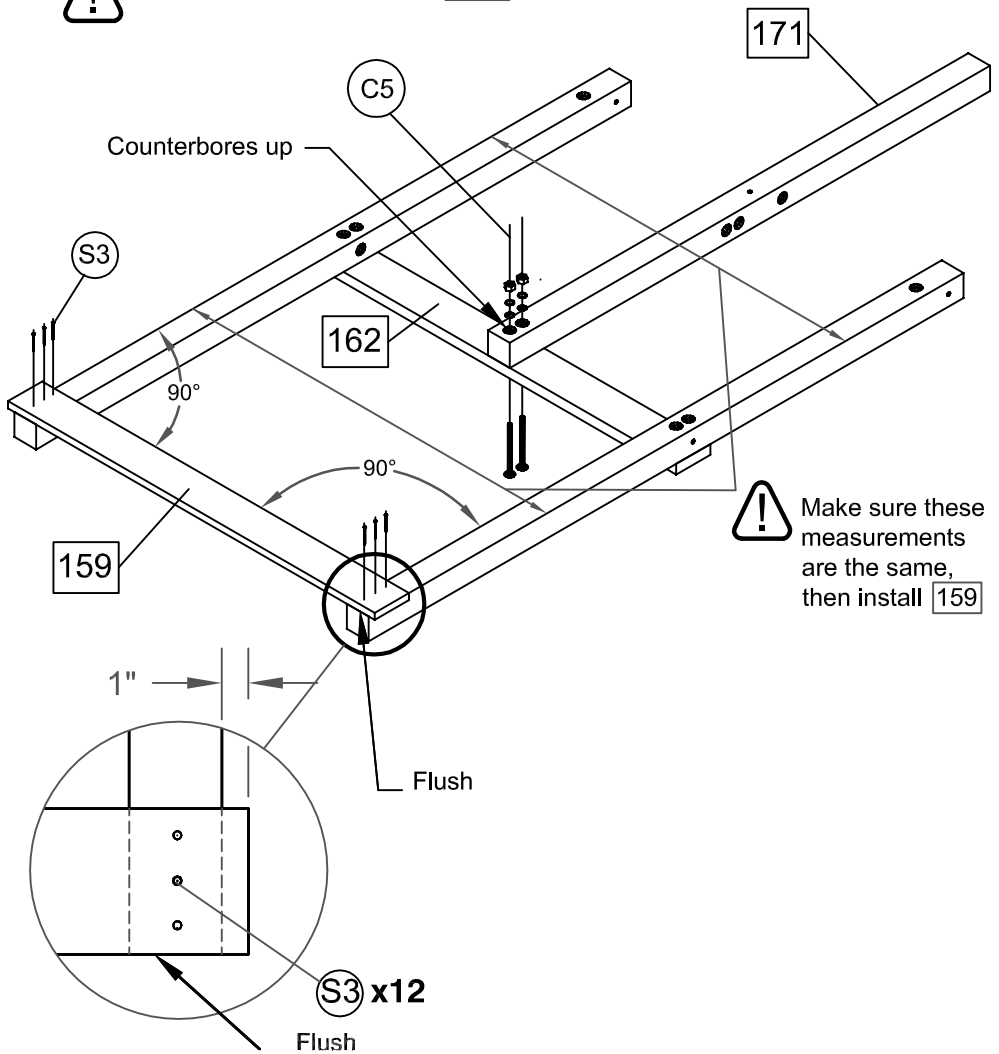

TOWER ASSEMBLY

PARTS REQUIRED:
(2) 111 Canopy Support
(1) 113 Rope Ladder Support
(1) 165 Tower End Brace
(2) 158 Sandbox Board

x10 C3 — 1/2" x 7" Carriage Bolt, 1/2" Flat Washer, 1/2" Lock Washer, 1/2" Hex Nut

x12 S3 — 3" Wood Screw

x2

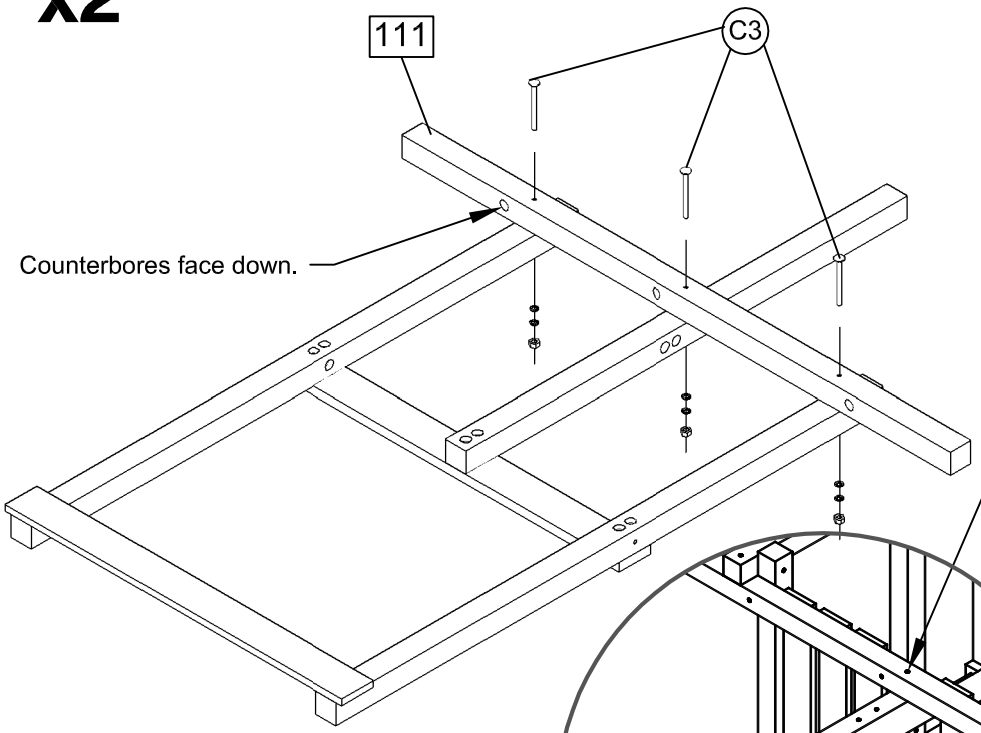

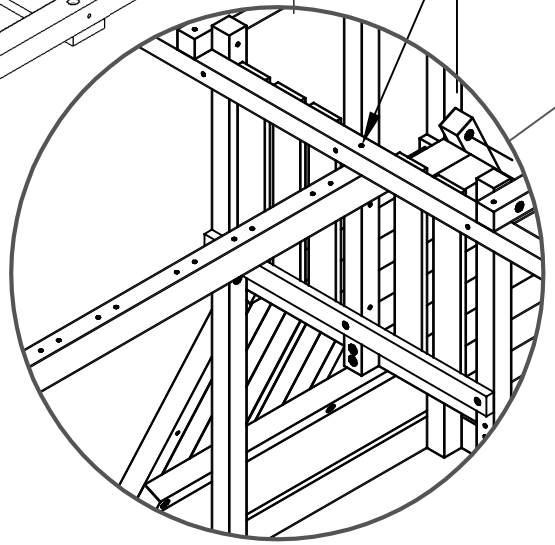

Location of swing beam on Circus base.

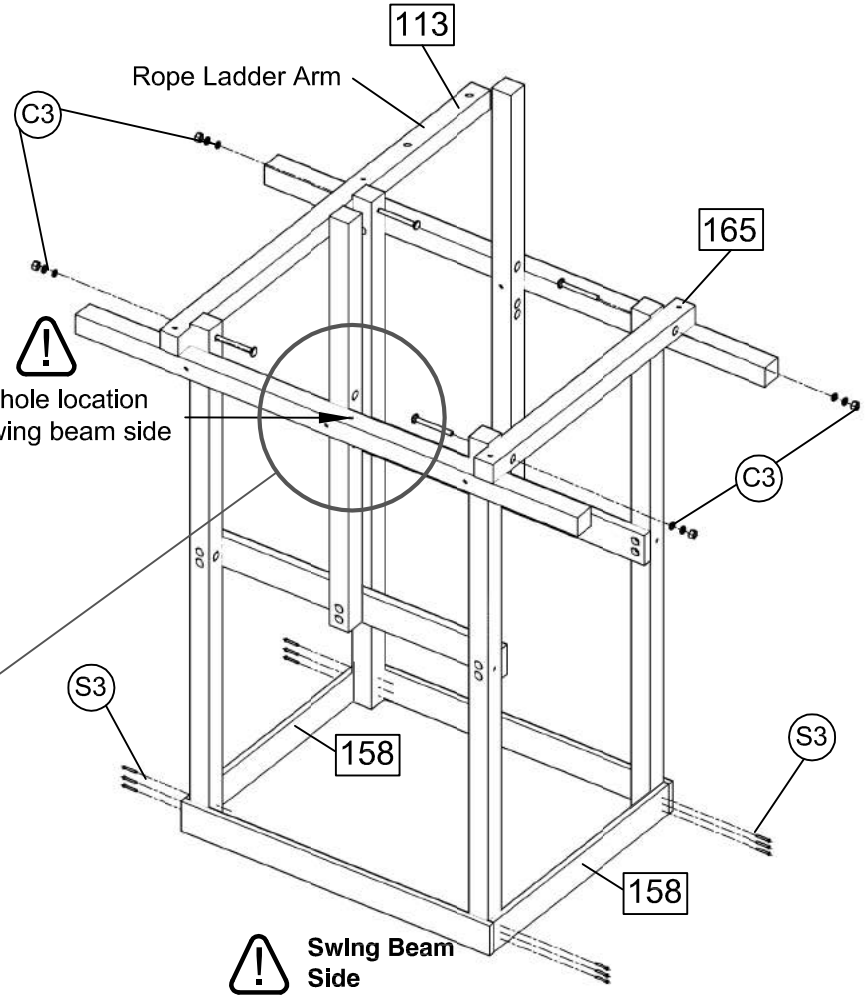

Square wall when installing 158

TOWER ASSEMBLY

PARTS REQUIRED:
(1) 207 Decking Support

x4 S3 — 3" Wood Screw

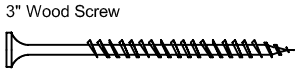

x4 C3 — 1/2" x 7" Carriage Bolt, 1/2" Flat Washer, 1/2" Lock Washer, 1/2" Hex Nut

x2 C5 — 1/2" x 5" Carriage Bolt

NOTE: Square playset and tighten all fasteners

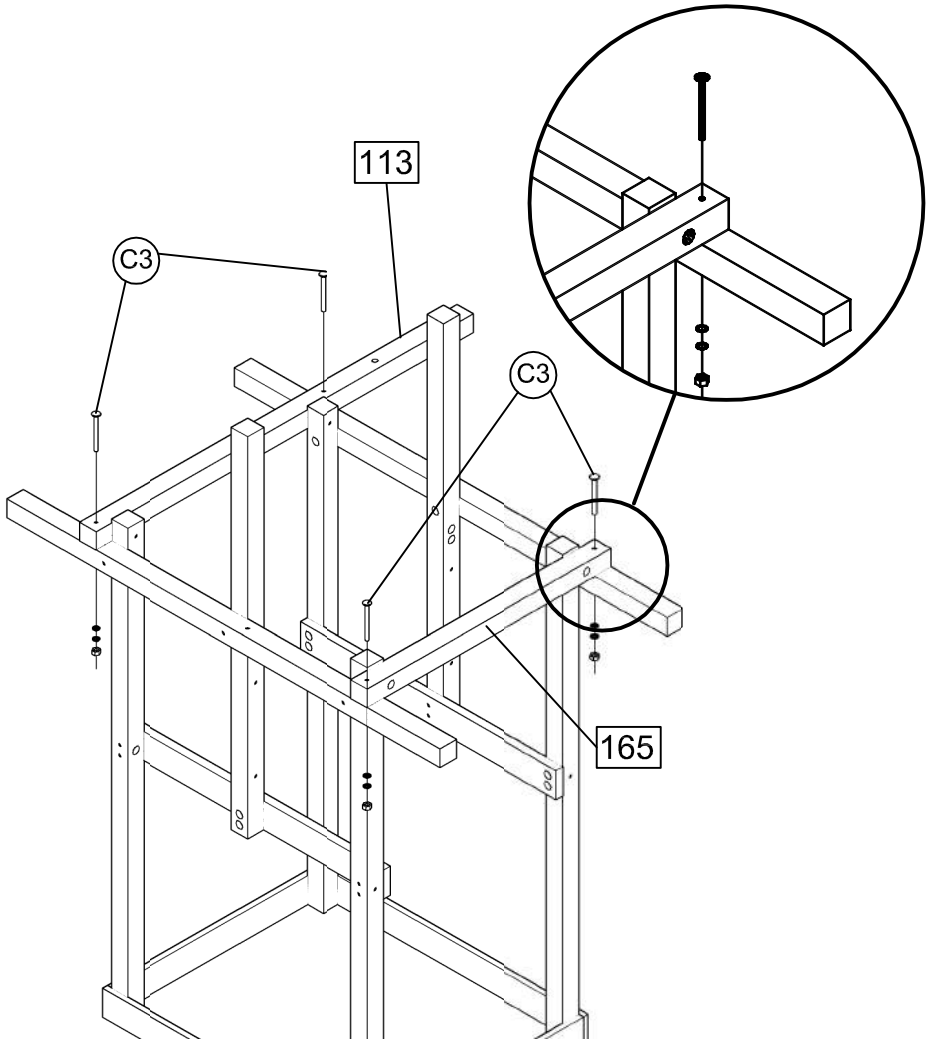

Swing Beam Side

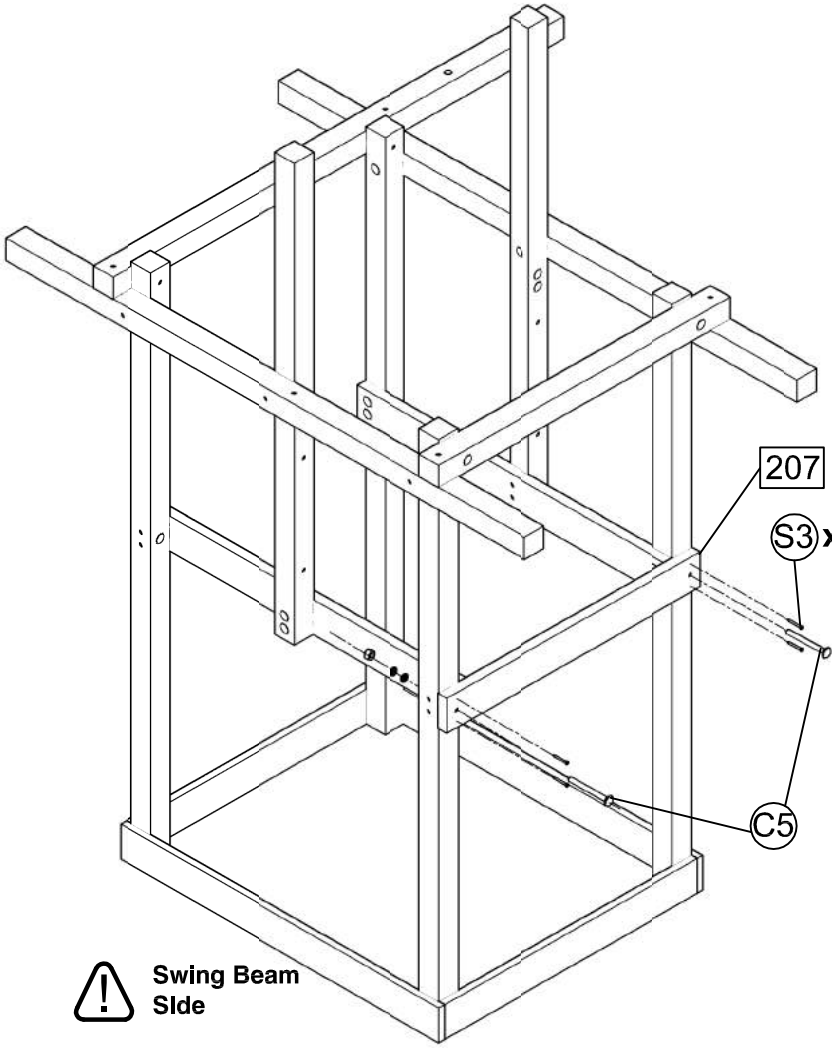

NOTE: Do not screw into cross-hole

Swing Beam Side

ROCKWALL ASSEMBLY

PARTS REQUIRED:

(1) 129 Rockwall Support
(2) 109 Rockwall Frame
(5) 159 Rockwall Board
(1) 160 Rockwall Board
(1) 127 Bottom Support
(1) 106 Rockwall Cleat

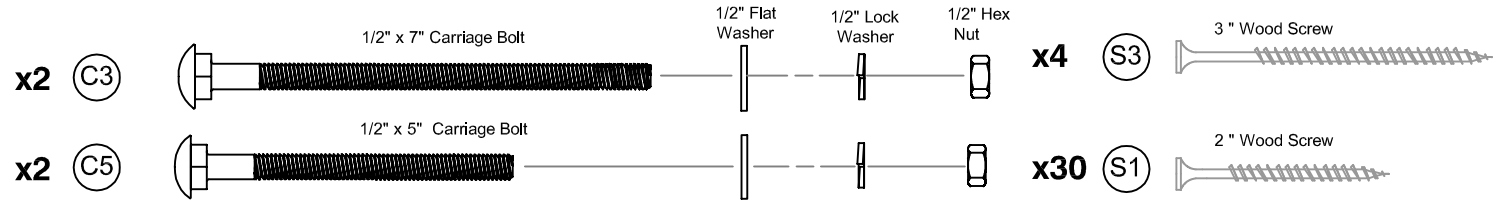

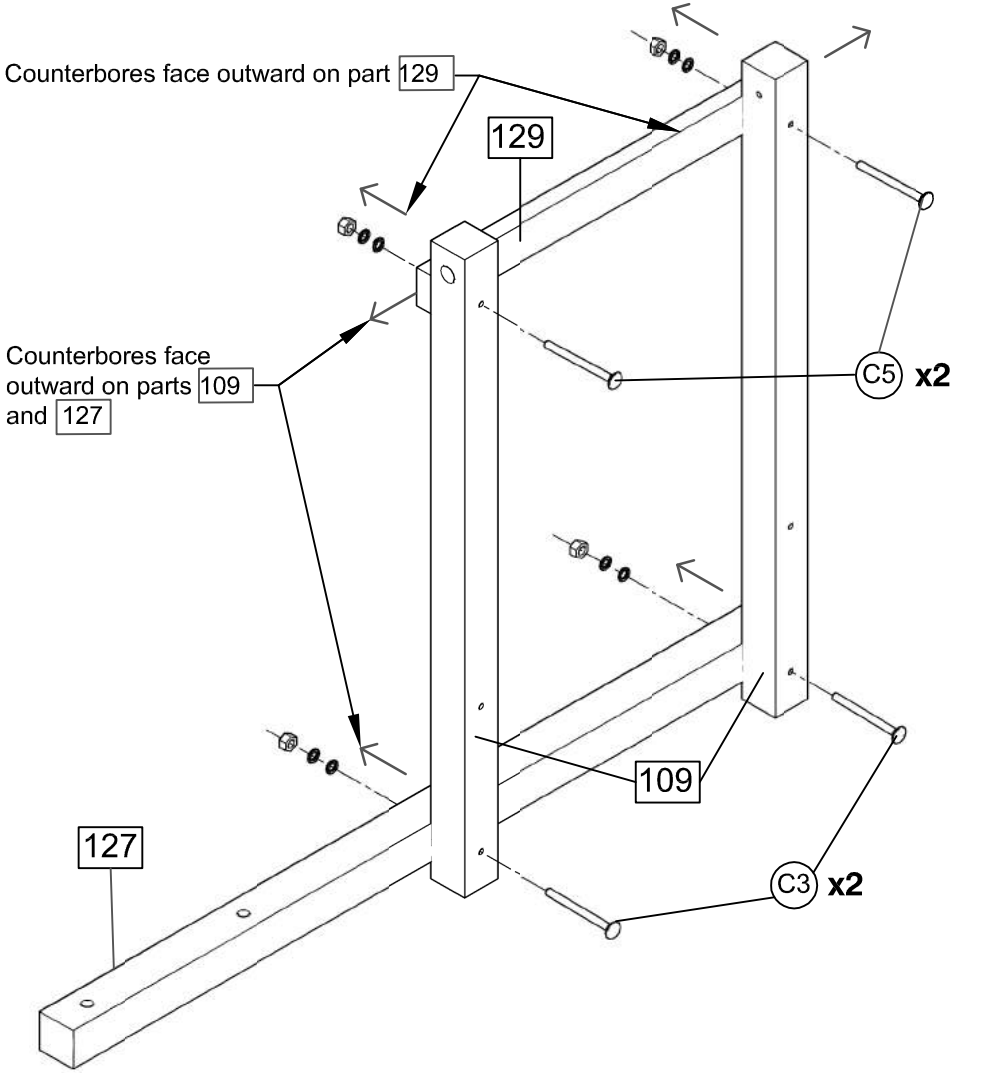

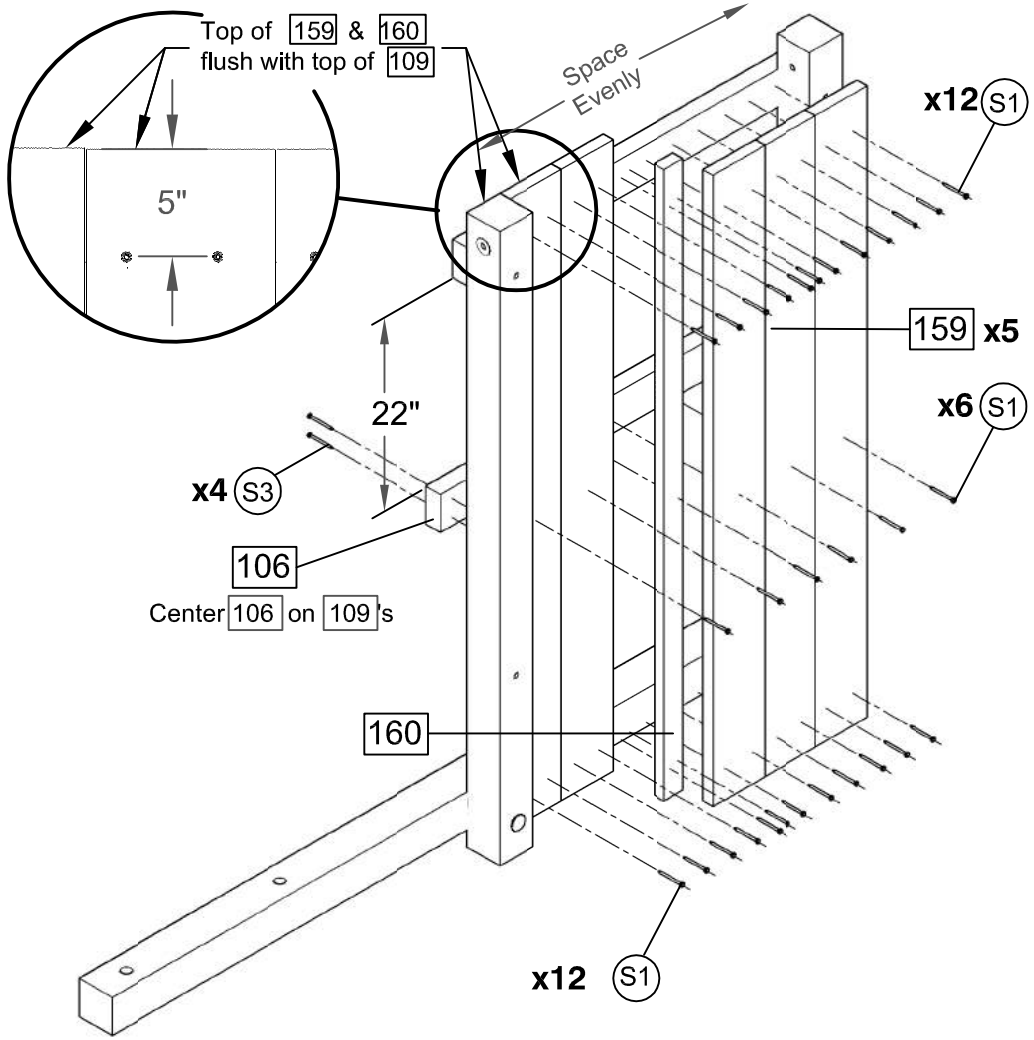

ROCKWALL AND DECK ASSEMBLY

PARTS REQUIRED:

(10) 163 Deck Boards

x2 C9 — 1/2 x 8-1/2" Carriage Bolt, 1/2" Flat Washer, 1/2" Lock Washer, 1/2" Hex Nut

x40 S3 — 3" Wood Screw

x2 C12 — 1/2" x 4-1/2" Carriage Bolt

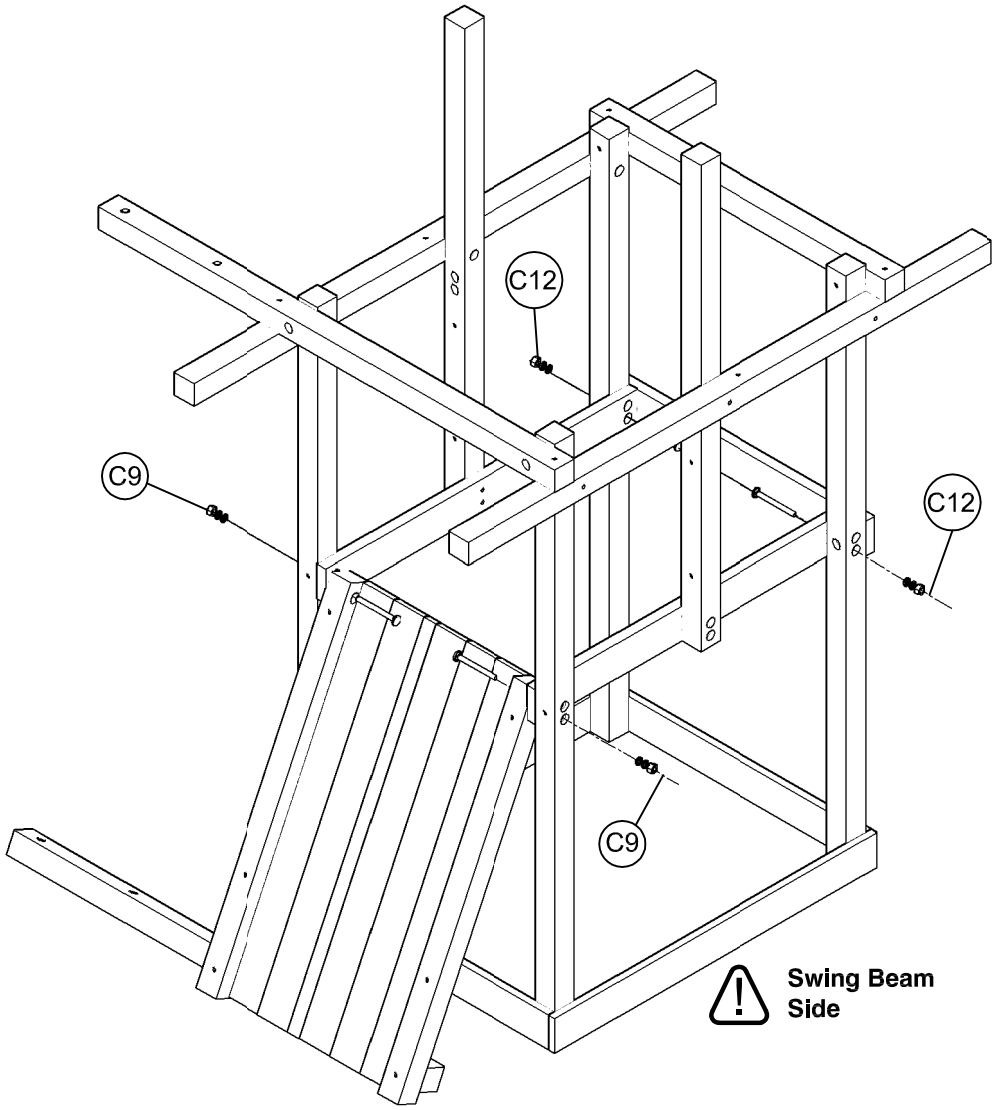

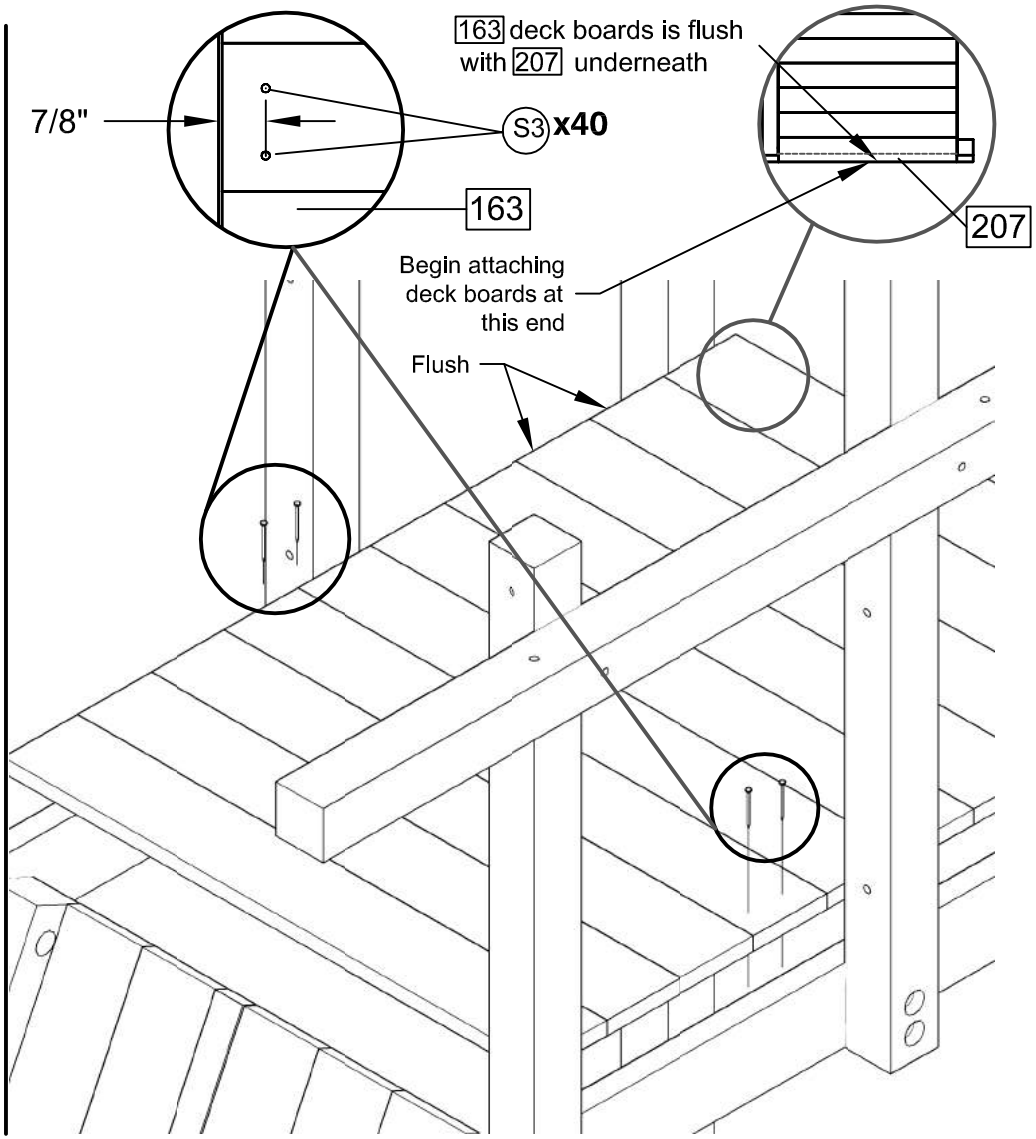

LADDER/HANDRAIL ASSEMBLY

PARTS REQUIRED:
(1) 175 Deck Cleat
(1) 3117 Pre-Assembled Ladder
(1) 195 Ladder Brace

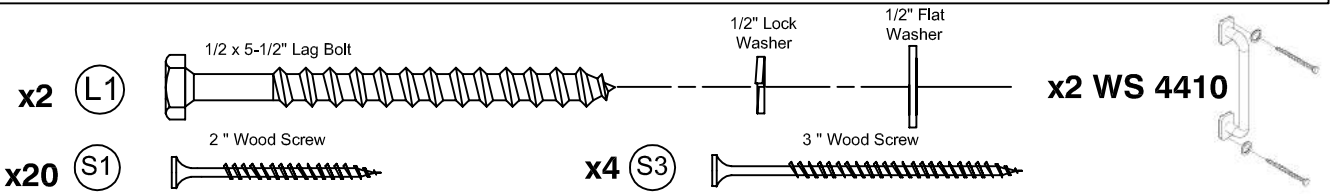

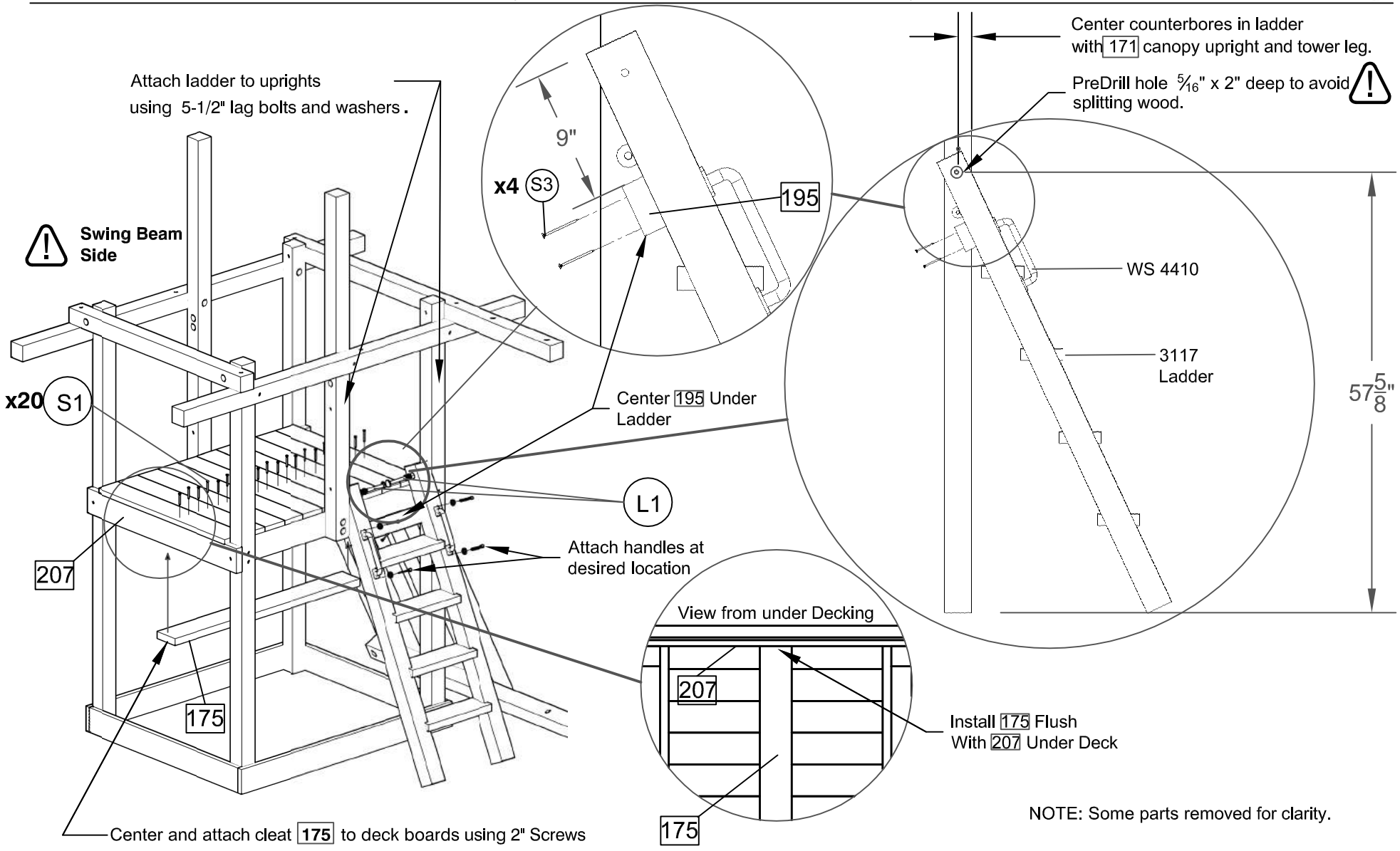

NOTE: Some parts removed for clarity.

HANDRAIL ASSEMBLY

PARTS REQUIRED:
(1) 86 Deck Facer (Long)
(1) 88 Deck Facer (Short)

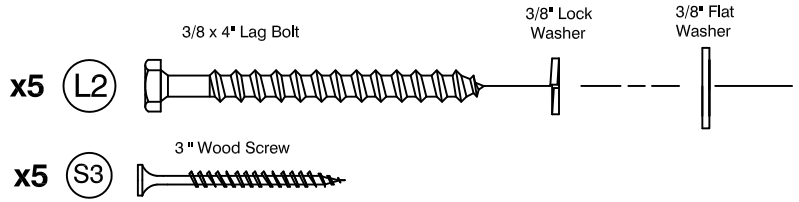

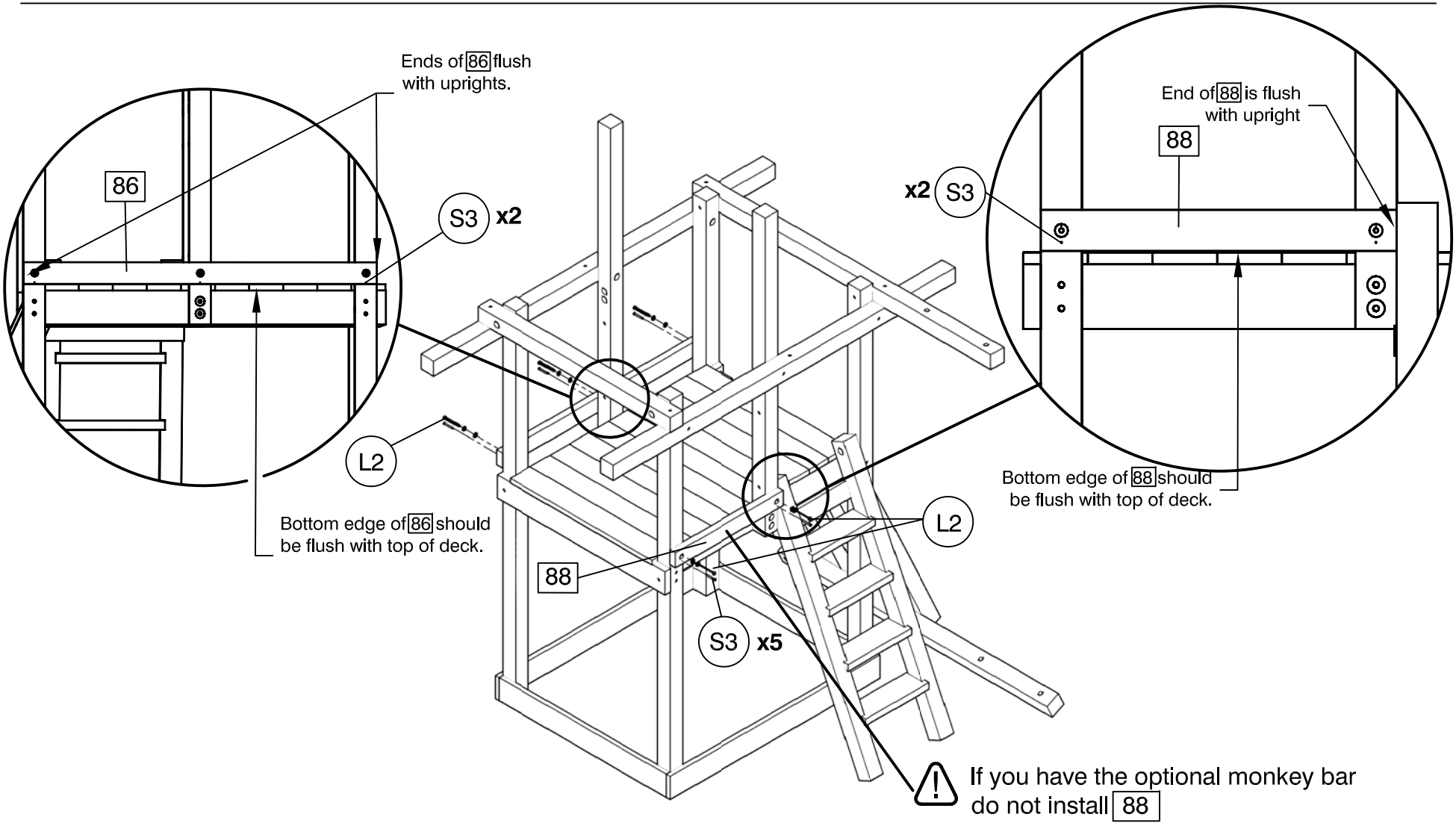

HANDRAIL ASSEMBLY

PARTS REQUIRED:
(7) 161 Baluster

x28 S2 — 2 " Wood Screw

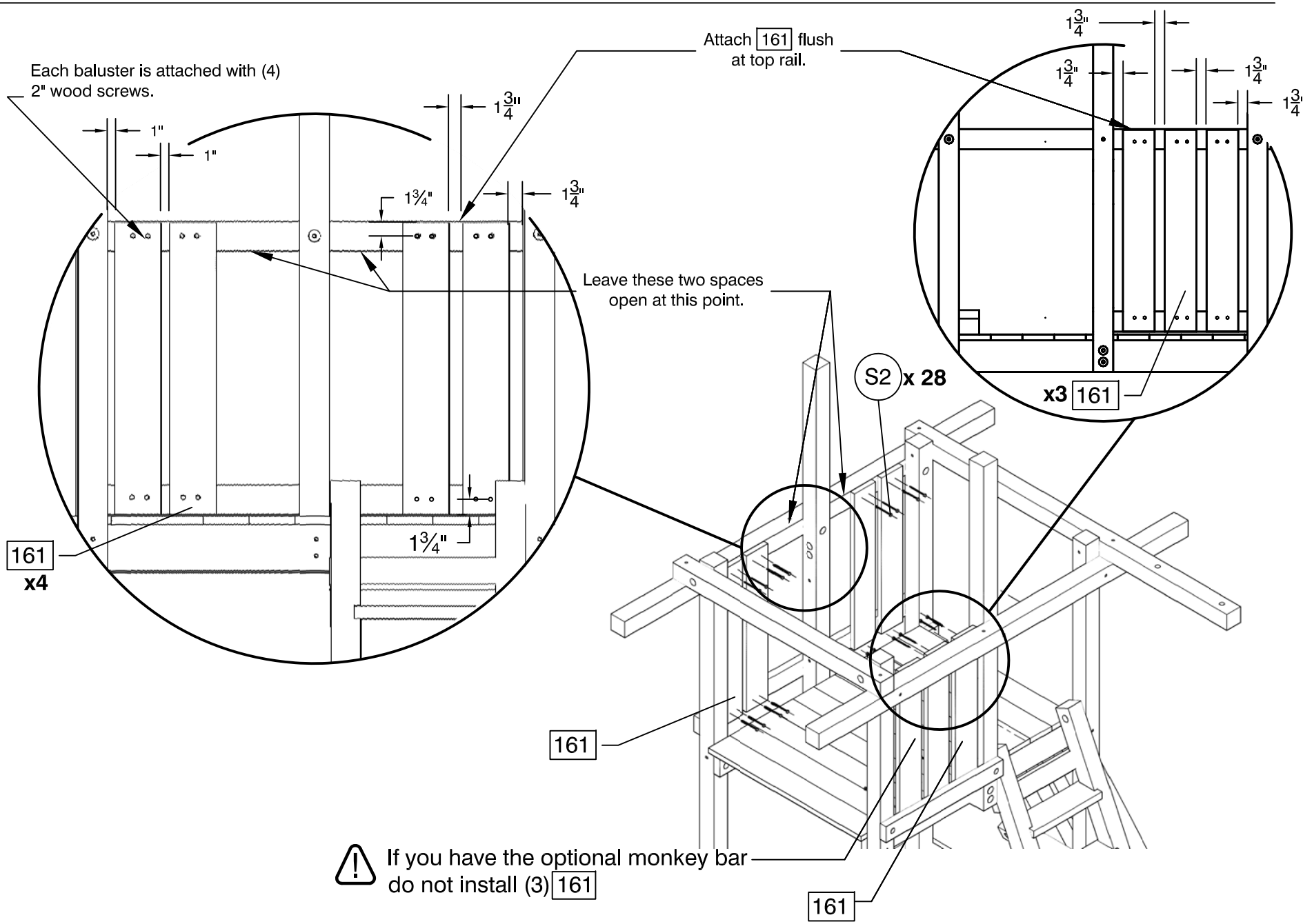

TIC TAC TOE ASSEMBLY

PARTS REQUIRED:
(2) 214 Tic Tac Toe Frame
(1) 279 Handrail Support
(1) 2470 Tic Tac Toe Assembly

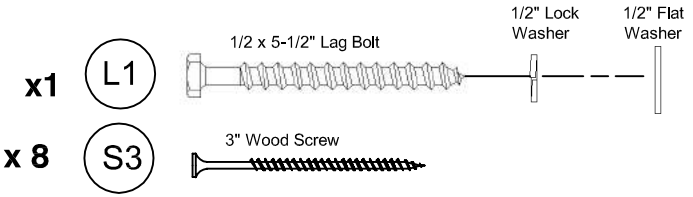

1. Attach part 279 to part 165 as shown using L1. Fasten bottom of 279 to deck using (2) S3 (Fig. A)

2. Mount one part 214 to parts 279 and 173 at 2" above deck with S3 wood screws. Locate and attach second part 214 17" above first (Fig. A).

3. Assemble the tic-tac-toe.

(See instructions in Tic Tac Toe box)

4. Assemble Tic Tac Toe brackets to parts 214 as shown using four 1" screws provided in kit 2470 (Fig. B). Center in opening.

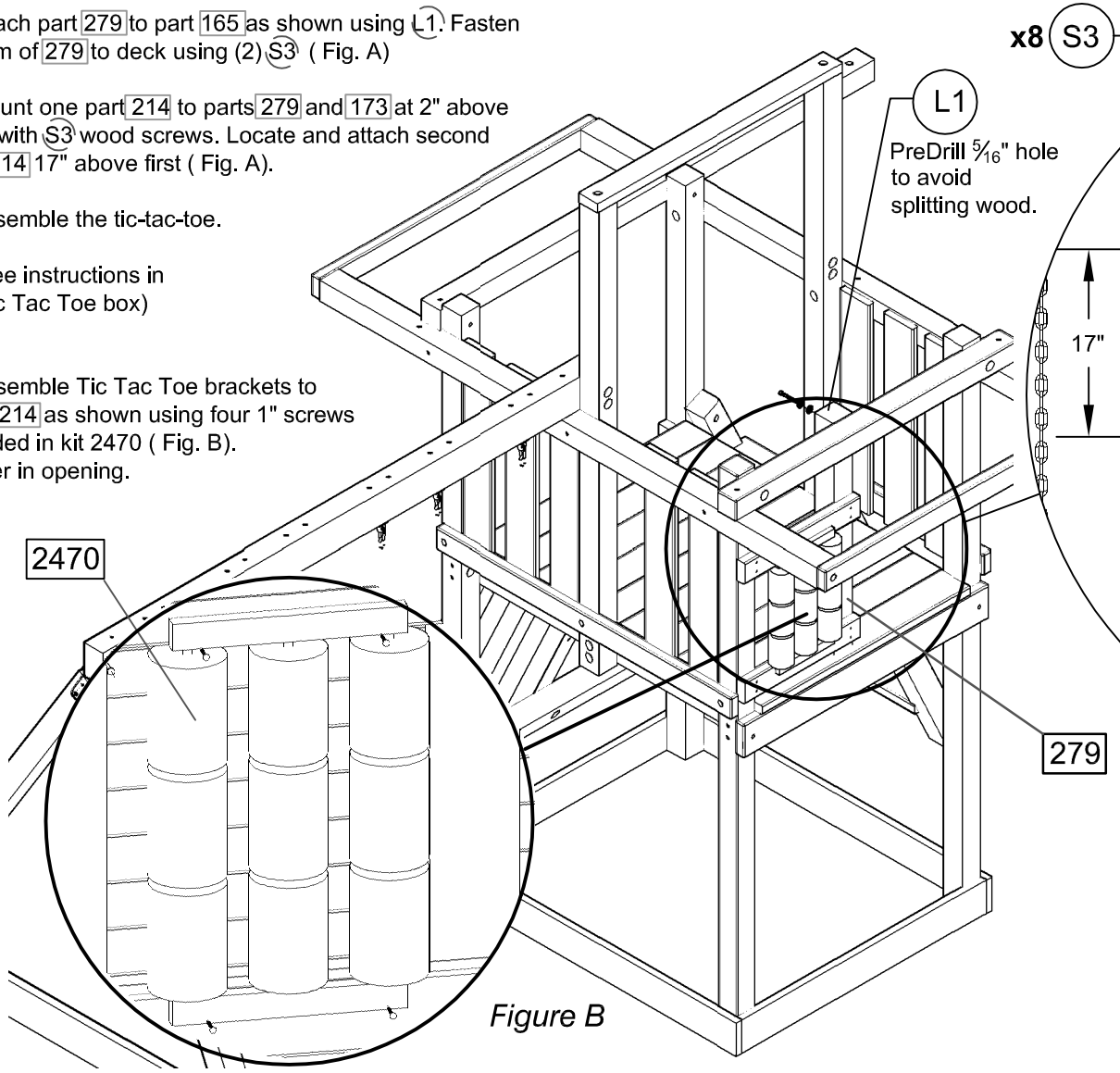

Figure B

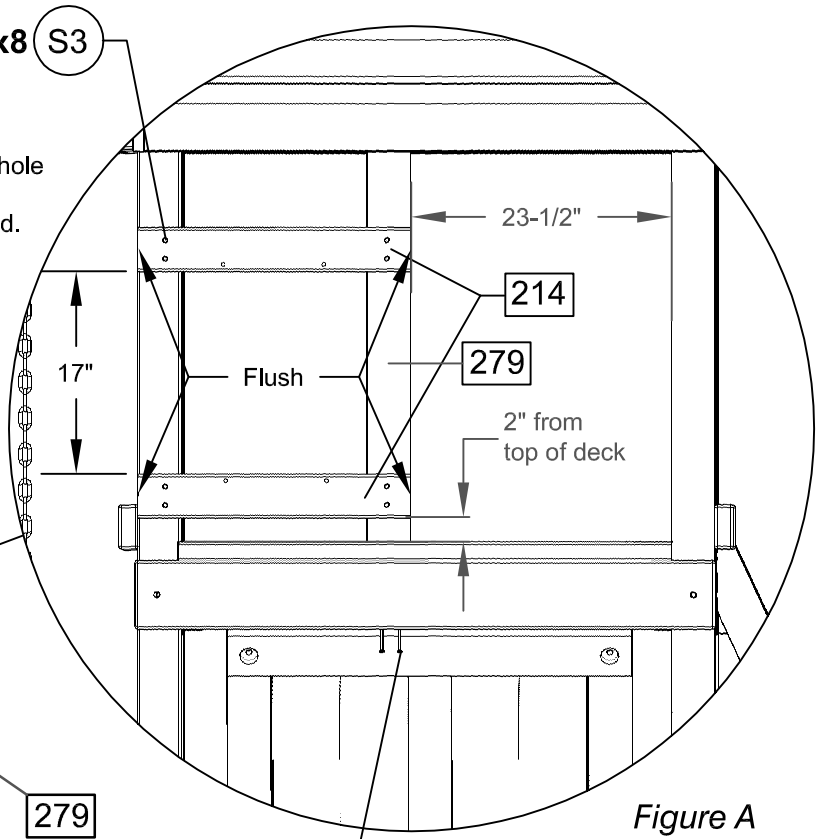

Figure A

Note: Some parts removed for clarity.

ACCESSORIES INSTALLATION

PARTS REQUIRED:
(1) 2442 9' Wave Slide
(1) WS 4412 Steering Wheel w/ Washer and Lag Screw
(1) 2453 Telescope w/ washer and lag screw
(1) 189 Slide Block

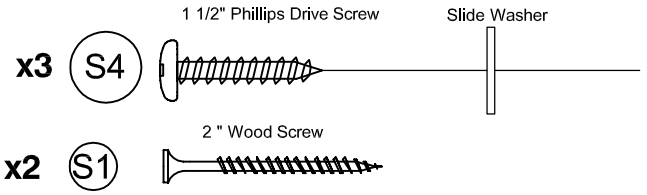

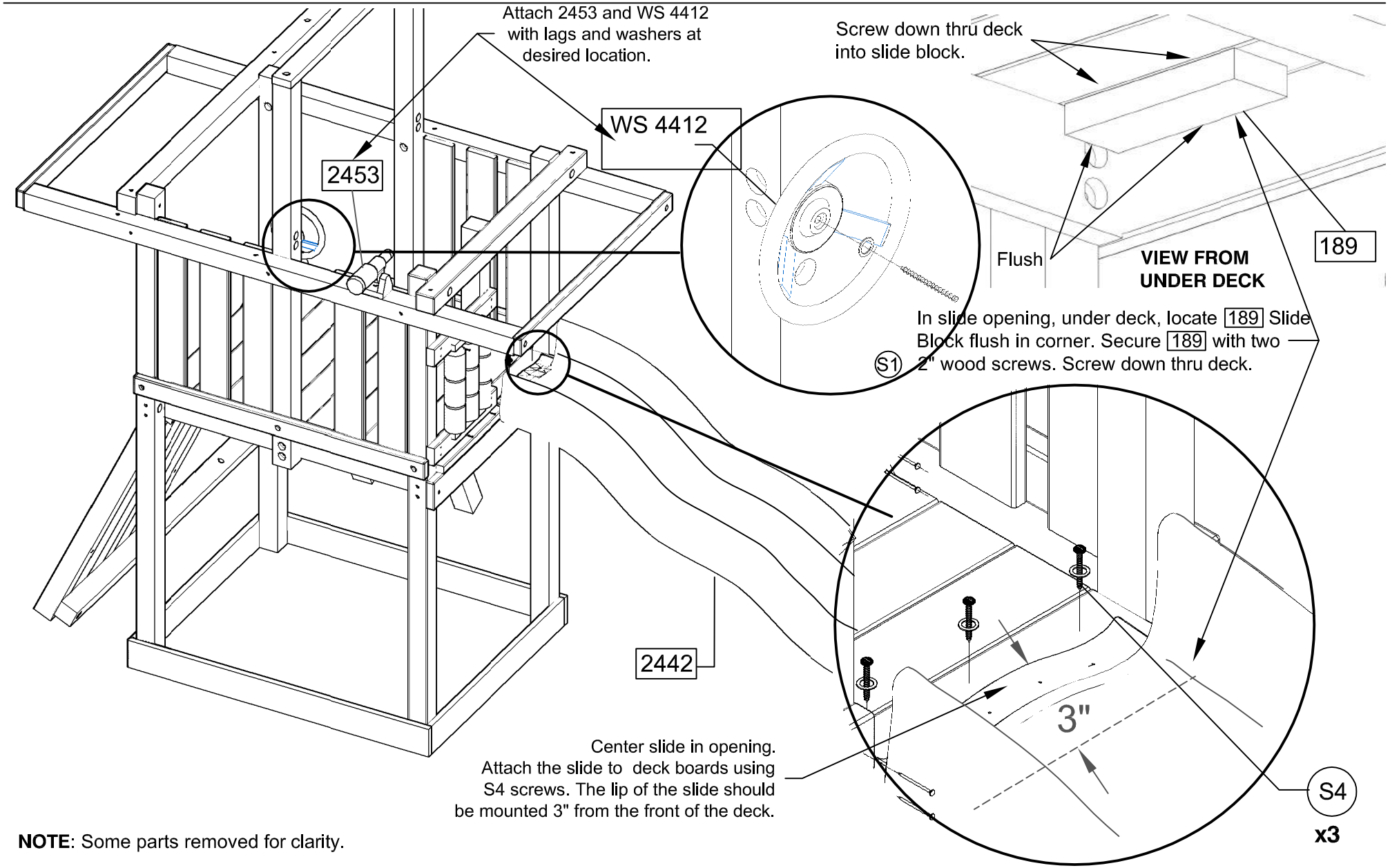

NOTE: Some parts removed for clarity.

ROPE LADDER / ROCKWALL ASSEMBLY

PARTS REQUIRED:
(5) 213 Rungs
(1) SA 3099 15' Rope
(6) WS 4541 Climbing Rocks

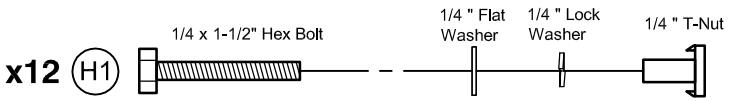

x2 WS 4410

1. Loop rope through top of 113 and tie a double knot.Make 13" between 4x4 and top of first step

2. Put rope through 213 and tie knot under 213. Continue installing 213s at spacing shown below.

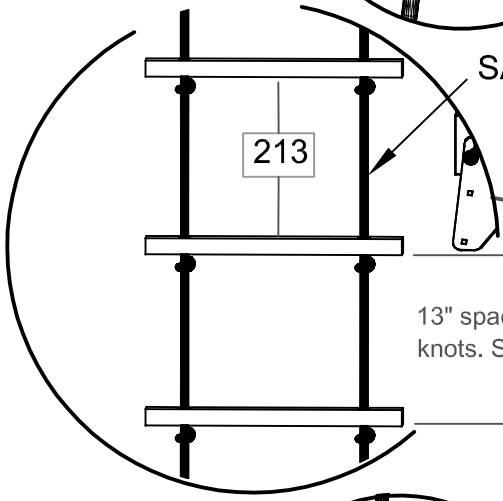

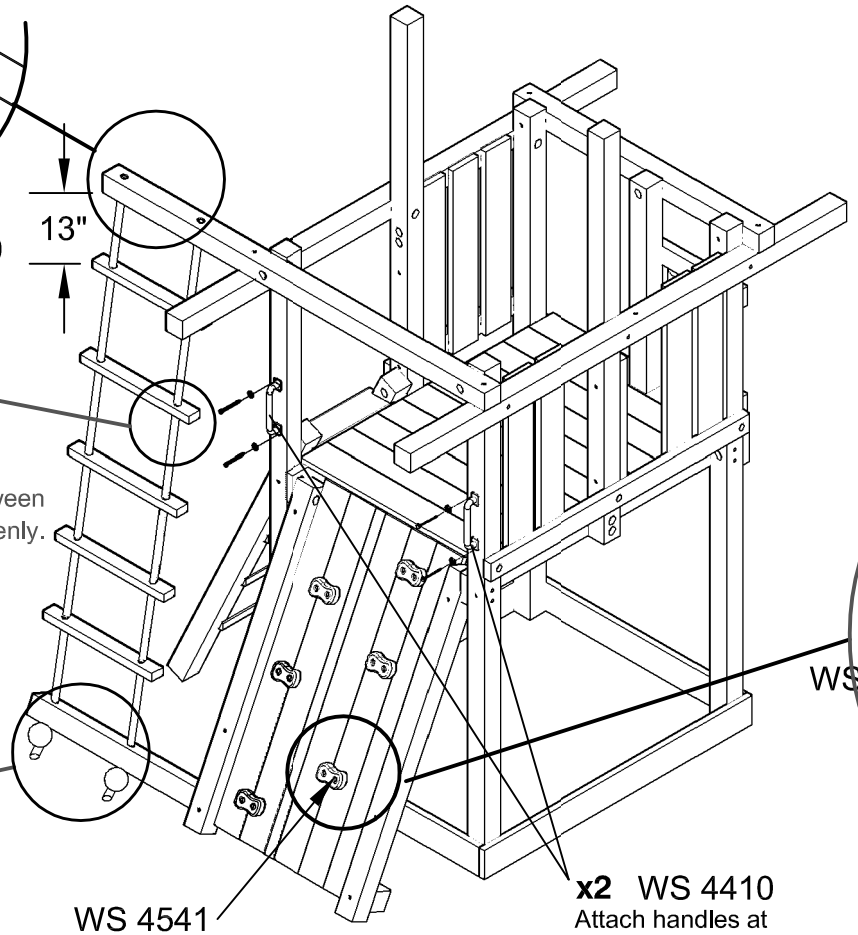

Mark and Pre-Drill 1/4" Hole at desired locations. Pound T-Nuts in from behind wall.

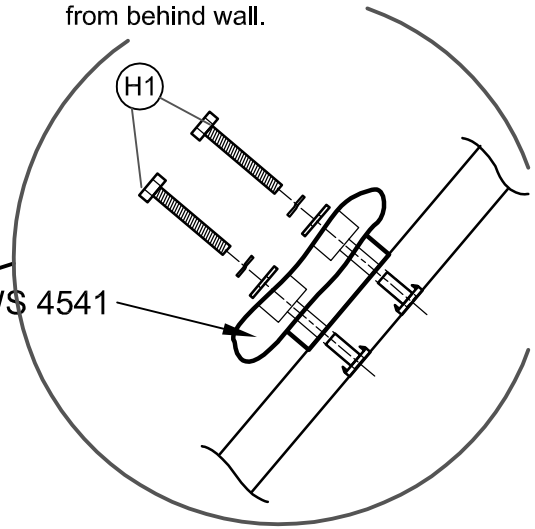

3. Loop rope through bottom brace and tie a double knot.

NOTE: Some parts removed for clarity.

SWING BEAM ASSEMBLY

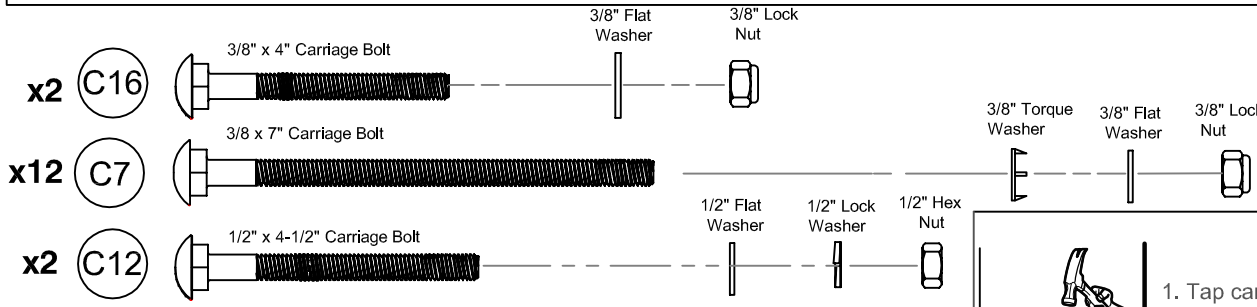

PARTS REQUIRED:
(1) 2449 Swing Beam Plate
(2) 167 A-Frame Leg
(1) 166 Swing Beam

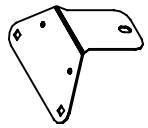

x4 WS 4889

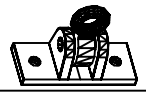

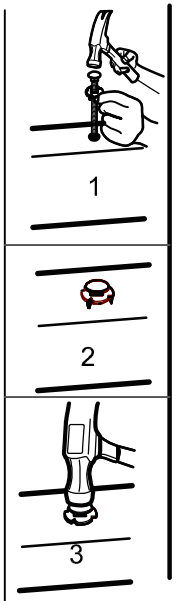

1. Tap carriage bolt through hole (DO NOT FULLY SEAT).
2. Make sure bolt and torque washer are centered over hole.
3. Tap carriage bolt to seat washer.

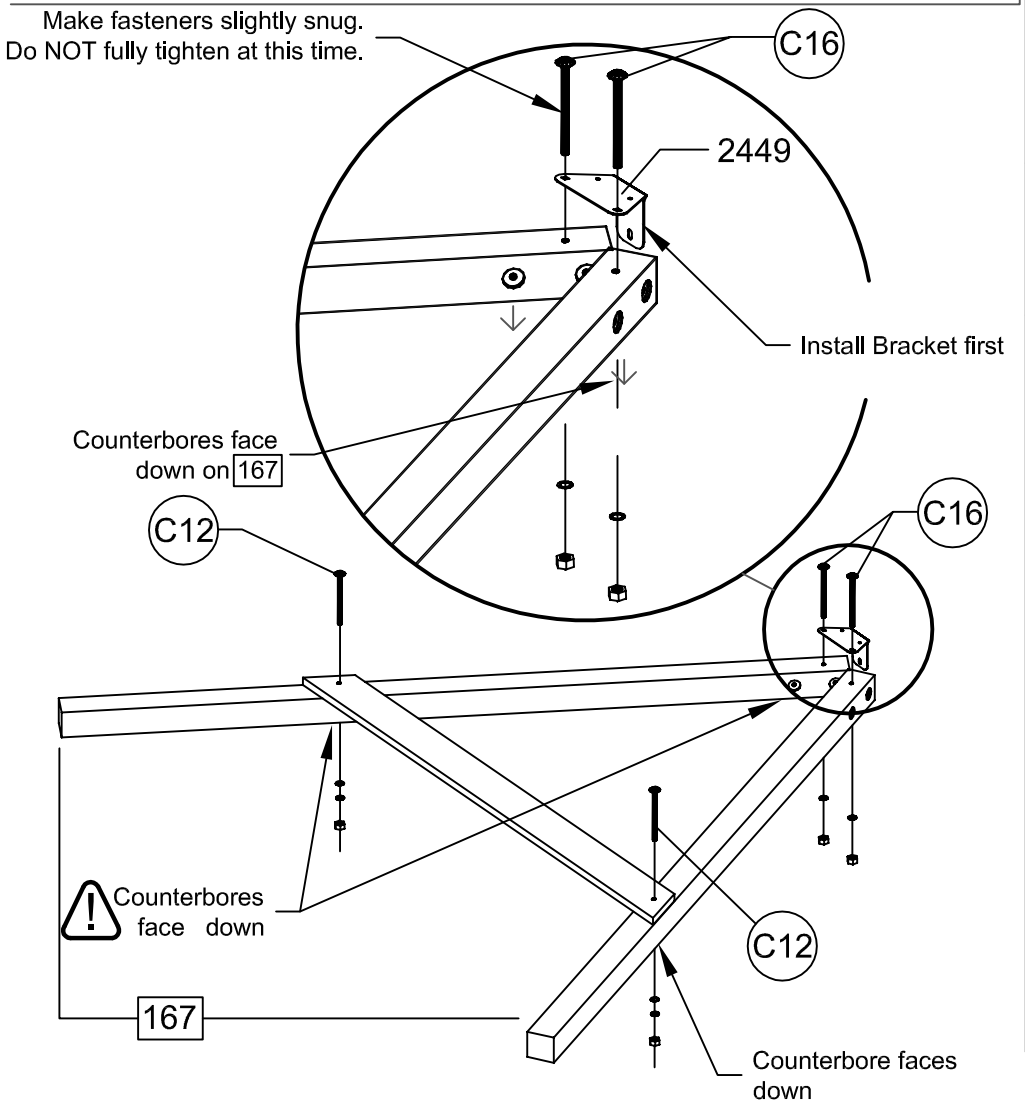

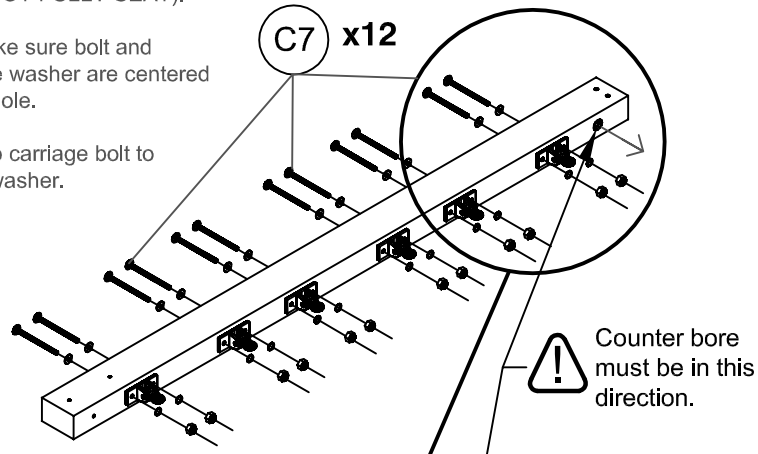

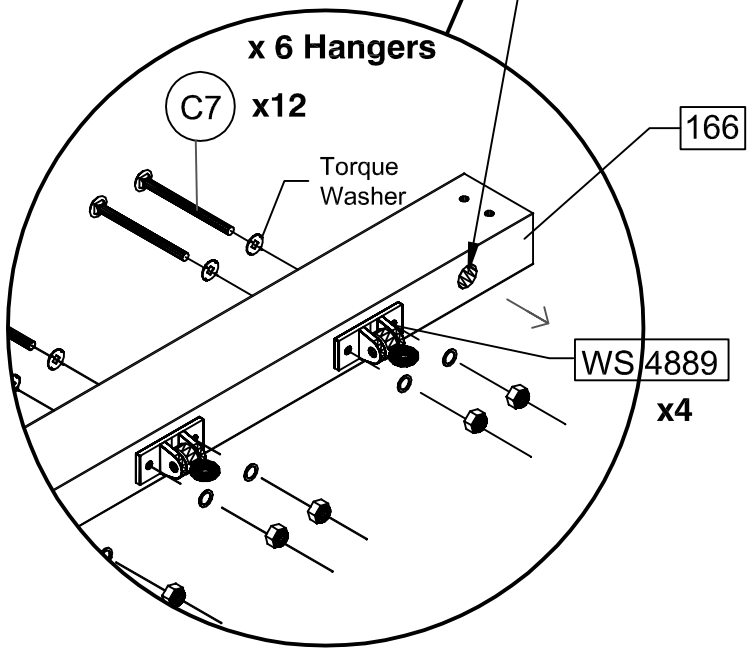

SWING BEAM ASSEMBLY

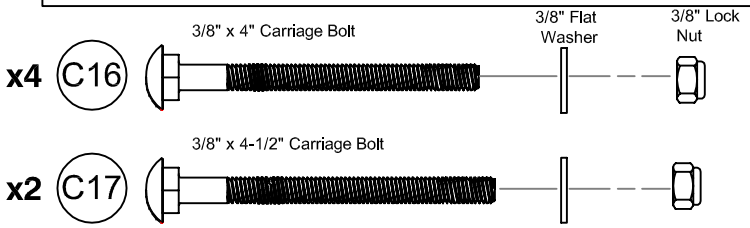

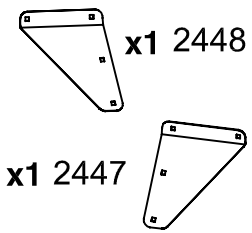

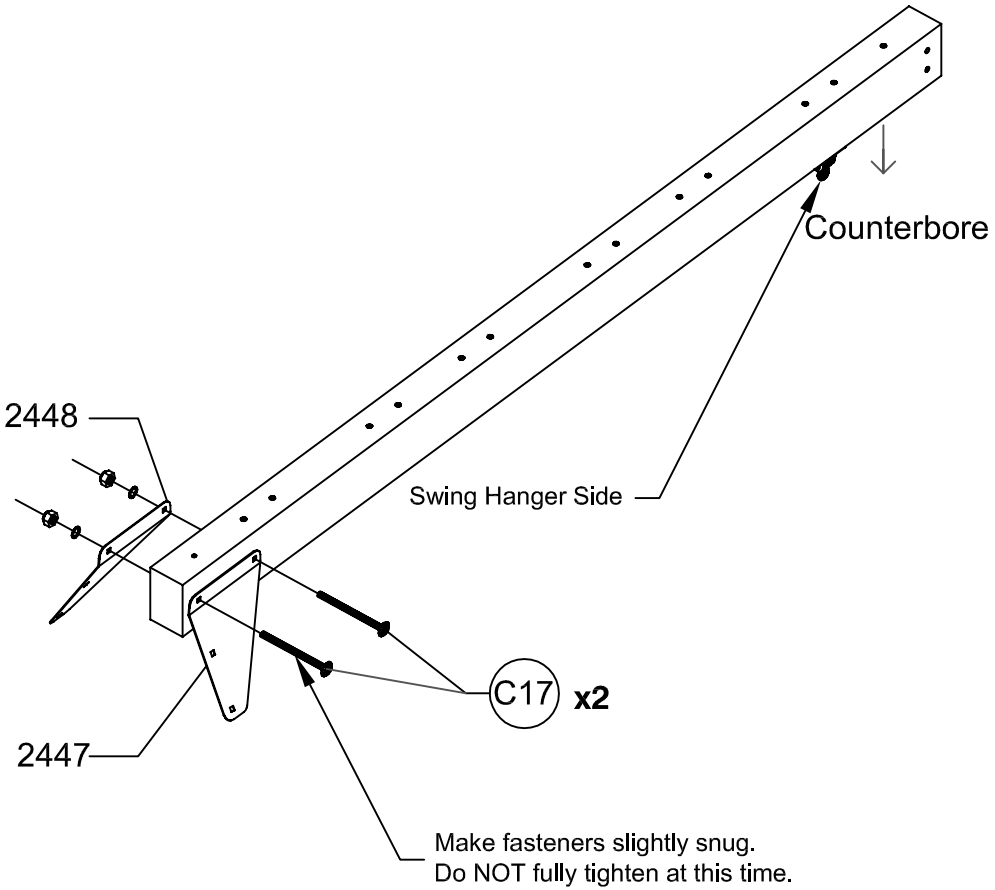

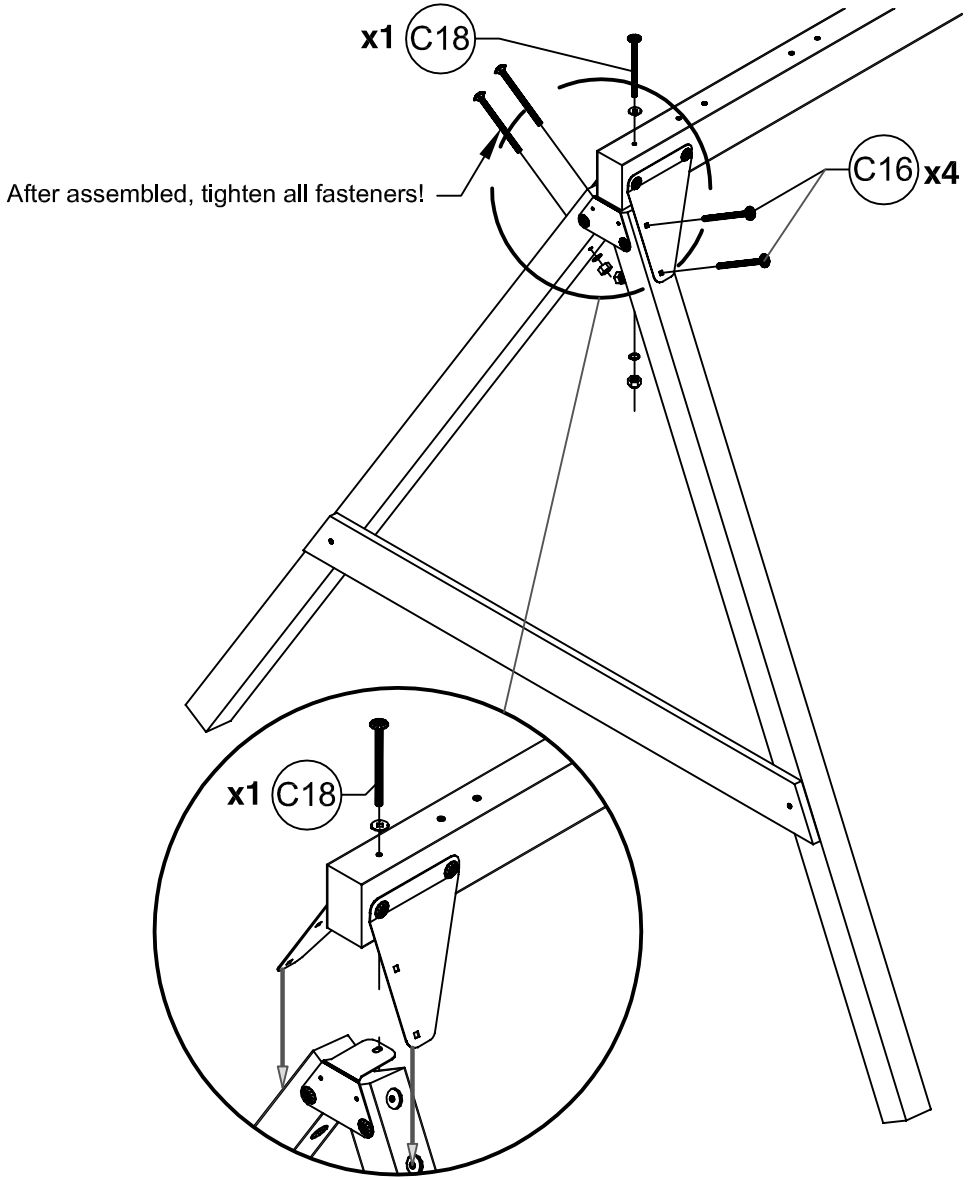

SWING BEAM ASSEMBLY

PARTS REQUIRED:
(1) 12 Deck Facer
(2) 161 Baluster

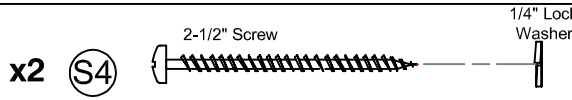

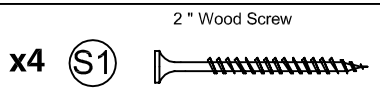

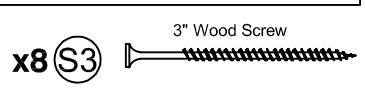

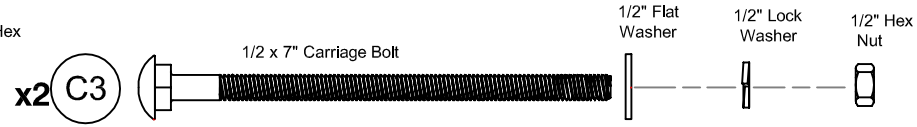

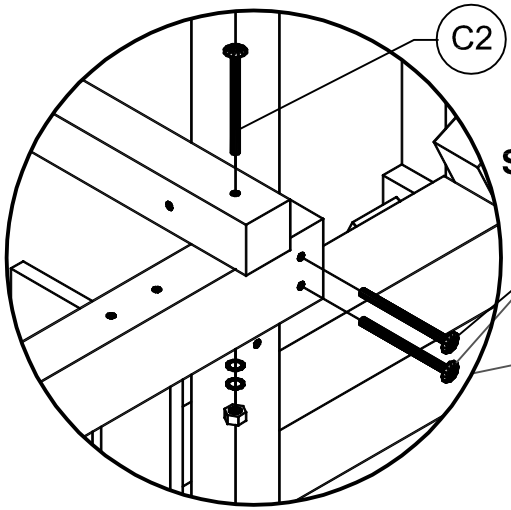

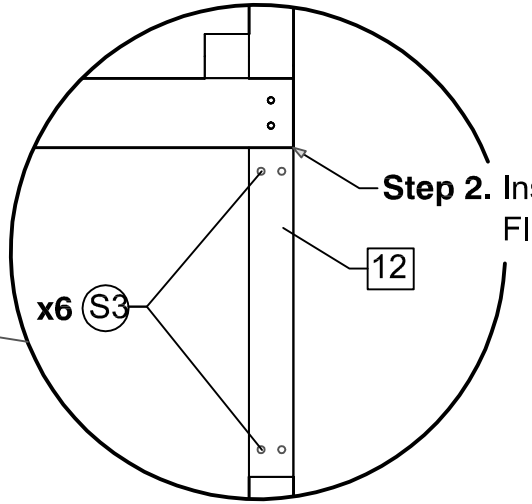

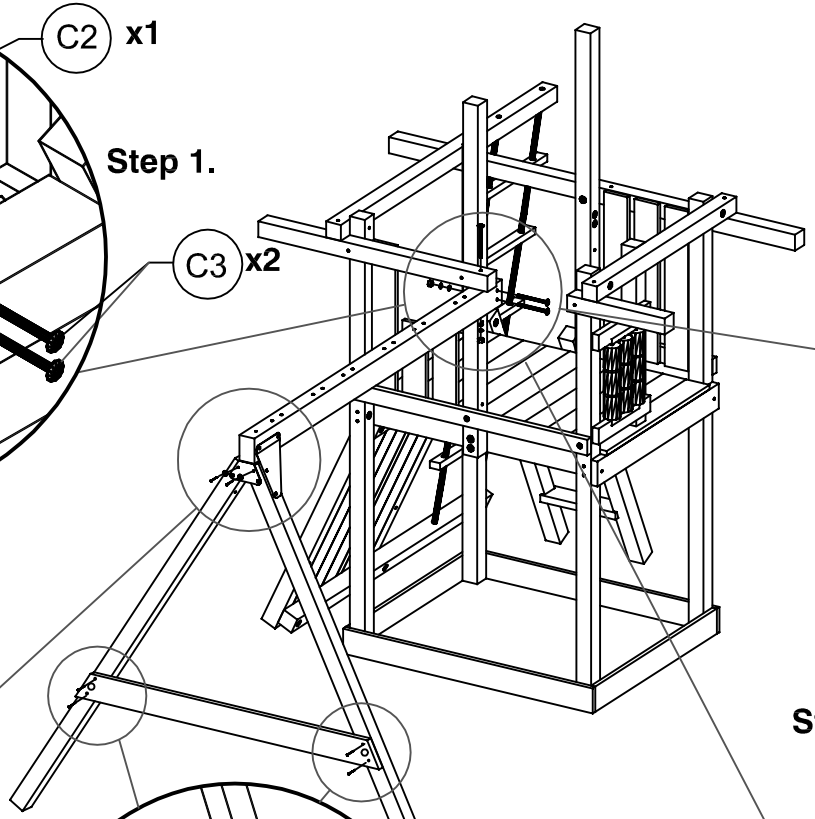

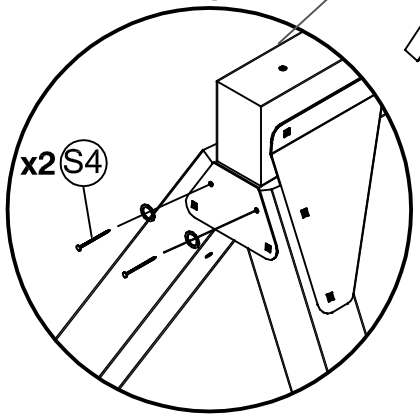

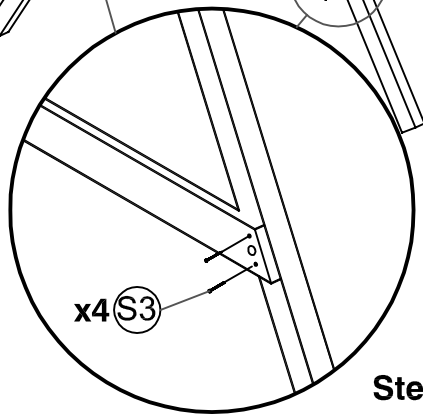

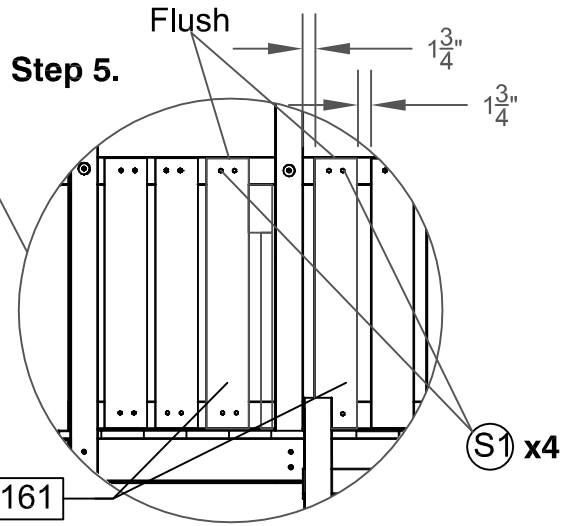

CANOPY OPTIONS

⚠ Refer to kit addition for instructions of either canopy assembly.

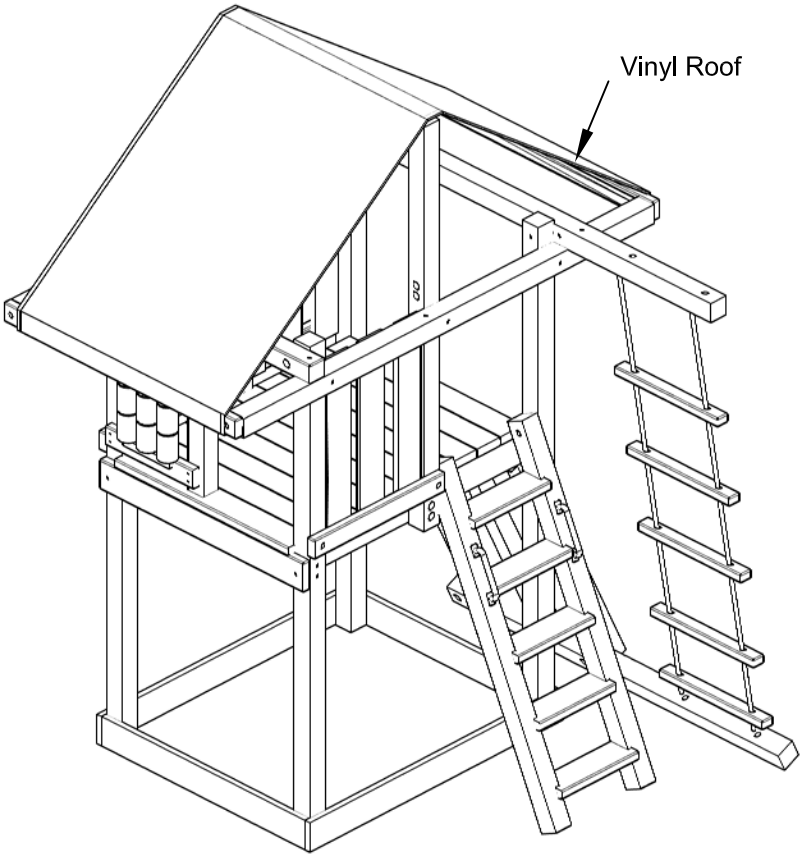

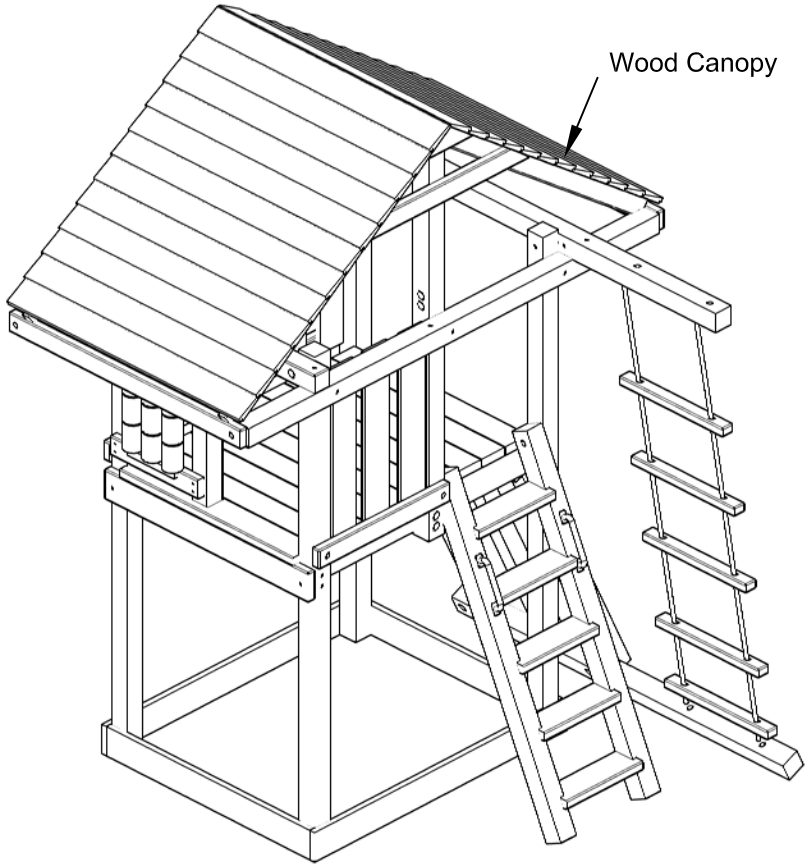

SWING INSTALL

PARTS REQUIRED:
(6) Quick Clips
(2) 2097 Belt Swing w/ chains
(2) WS 2435 Trapeze w/ chains
(1) 2499 Nameplate w/ hardware

1. Attach one Quick Clip to the top of each chain.
2. Attach Quick Clips to Swing Hangers.

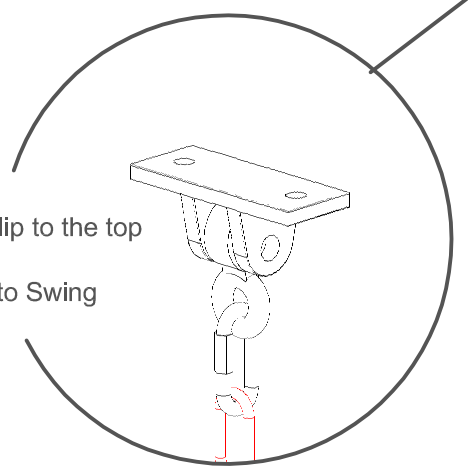

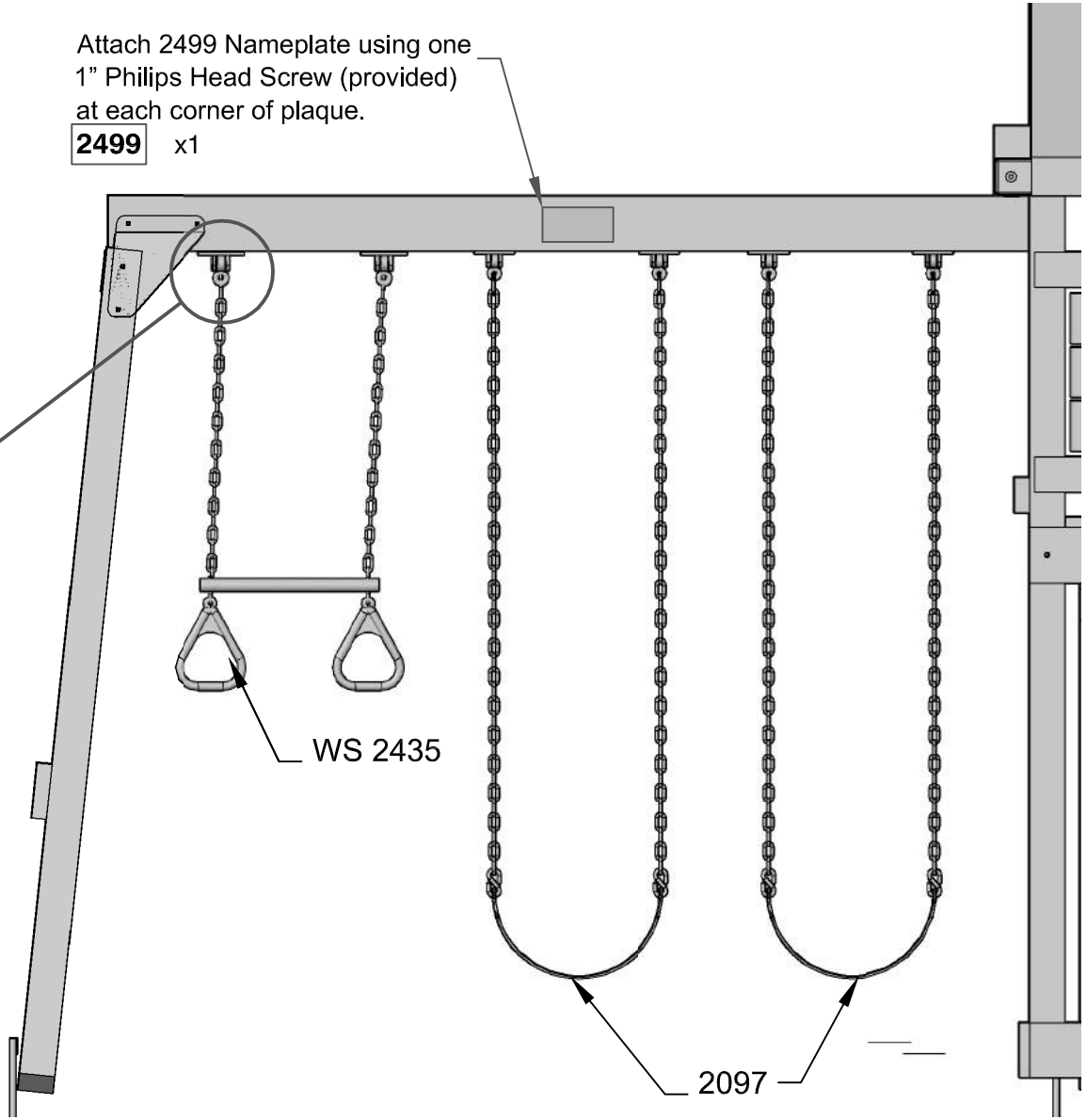

Stake Set

PARTS REQUIRED:
(4) 2601-A or WS 4522

x4 Stake

x4 2-1/2 Lag Bolt

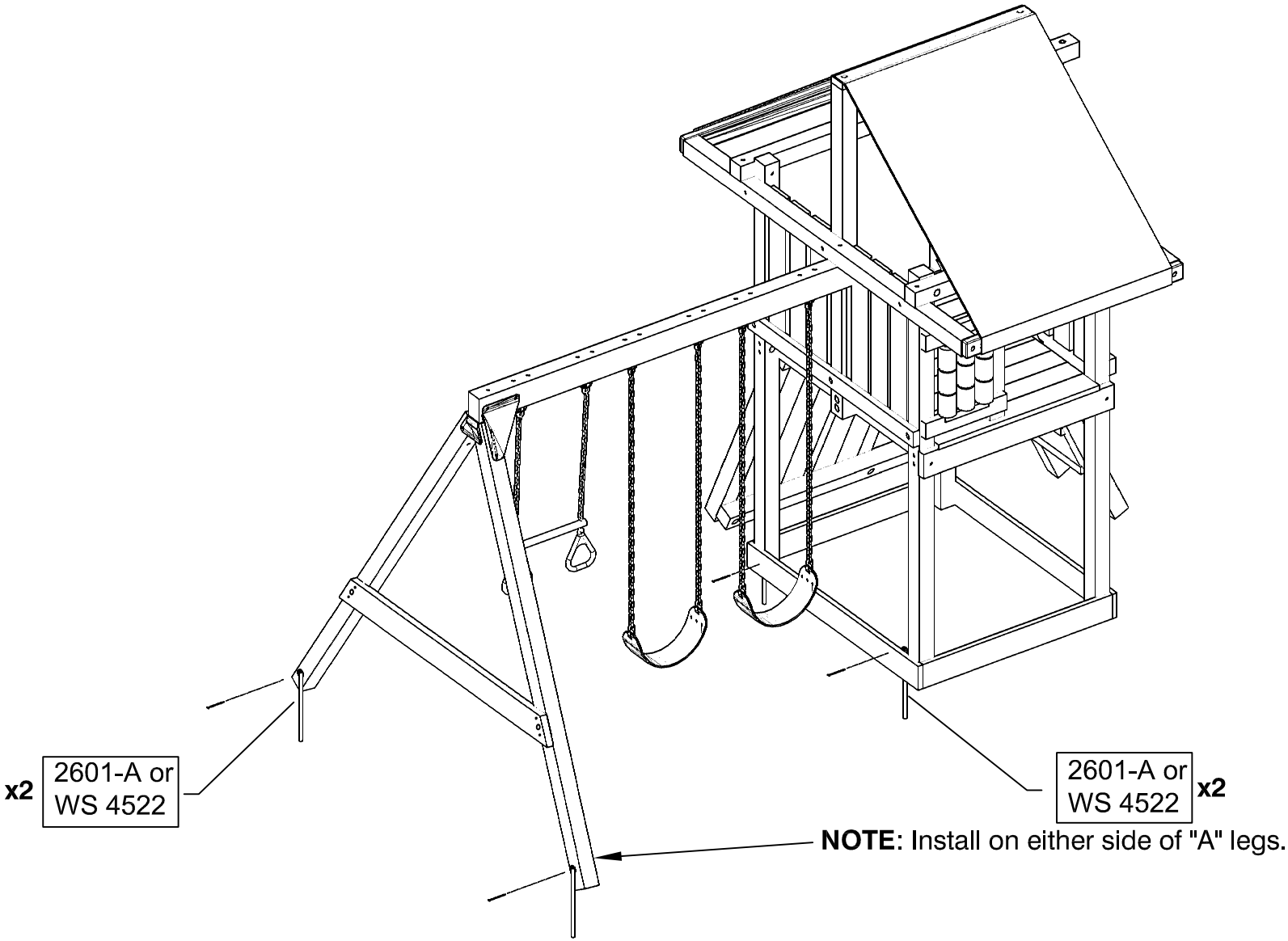

Options

Note: Refer to the instructions packed into the add-on and accessory cartons for proper installation.

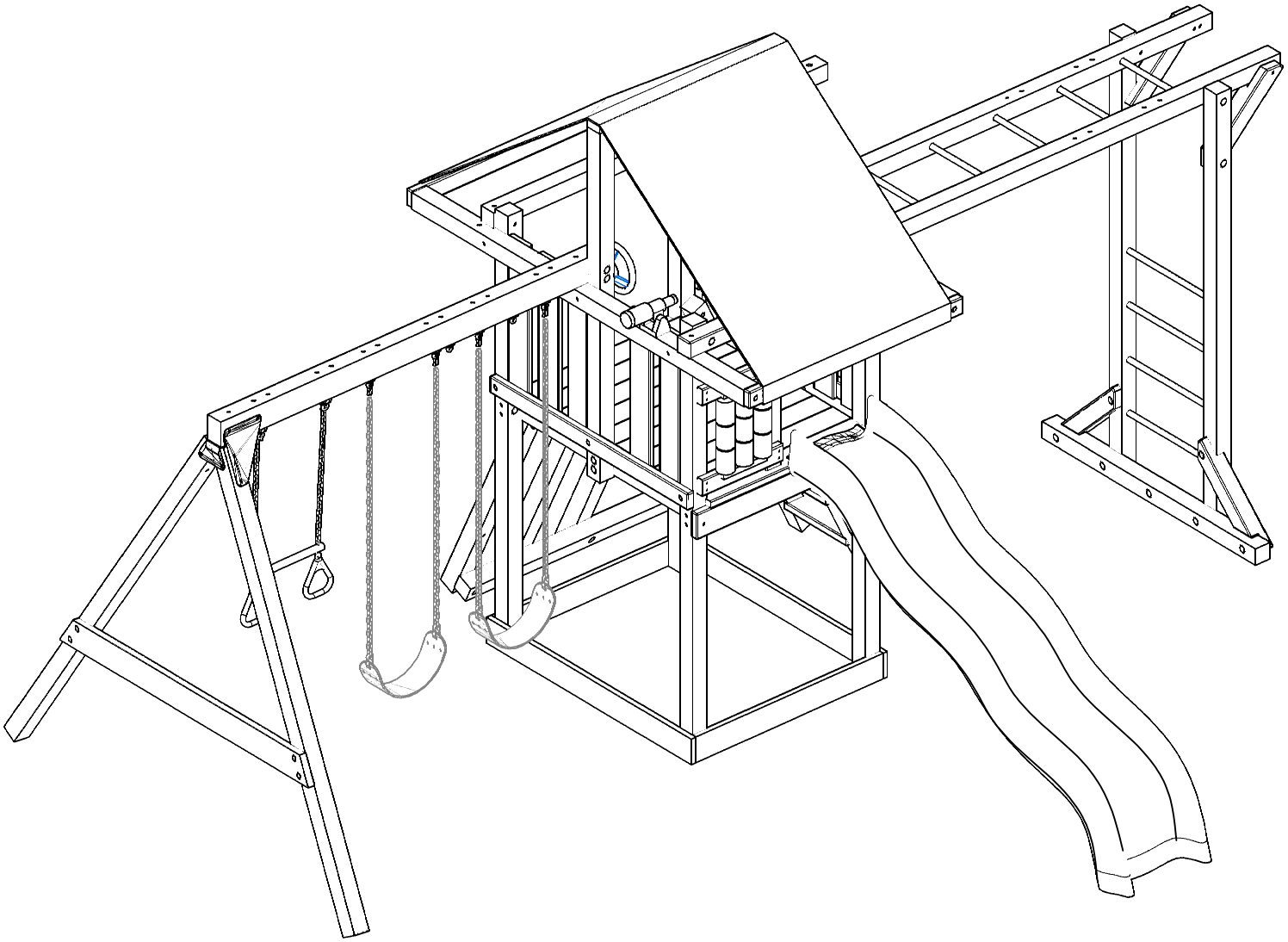

OPTIONAL SANDBOX COVER

PARTS REQUIRED:
(1) 2535 Sandbox Cover

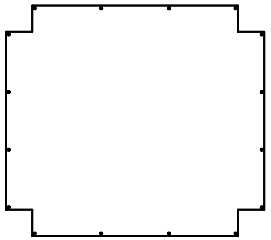

x16 1450

1. Center sandbox cover over sandbox. Fold cover over sides, gently pushing on snaps to leave an impression in the wood. Mark snap position. Keep each mark aligned with corresponding snap.

2. Screw snap stud into each marked location.

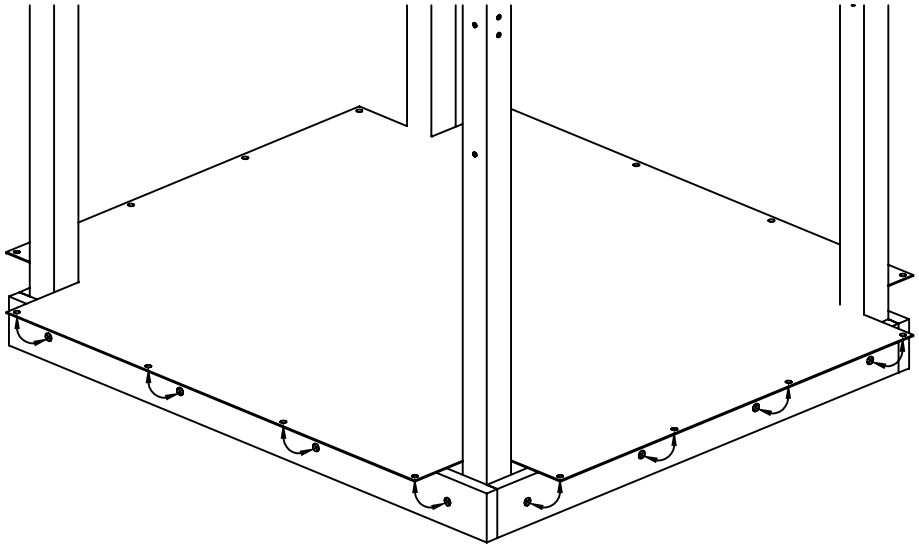

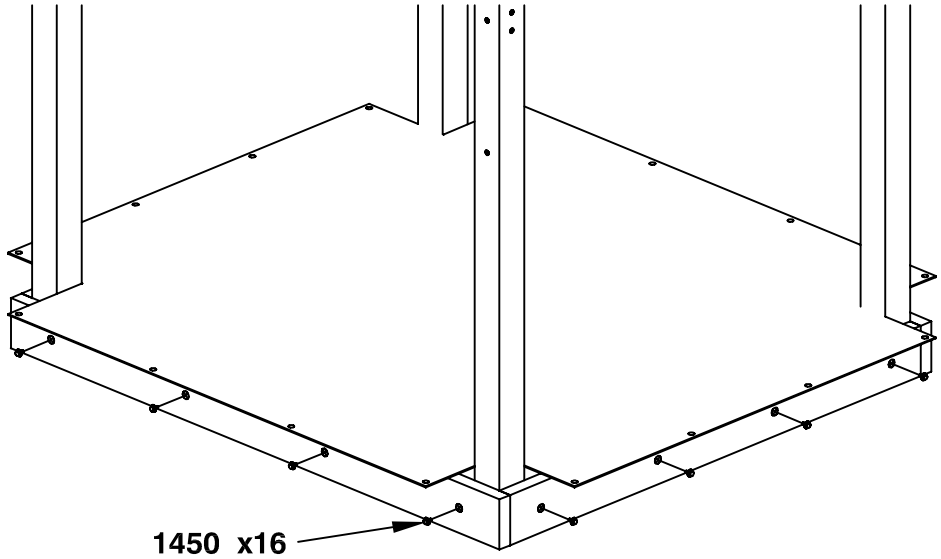

OPTIONAL SANDBOX COVER

PARTS REQUIRED:
(1) 2535 Sandbox Cover

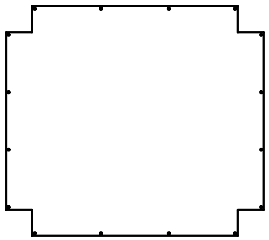

1. Center sandbox cover over sandbox. Fold cover over sides and snap grommets into the snap studs.

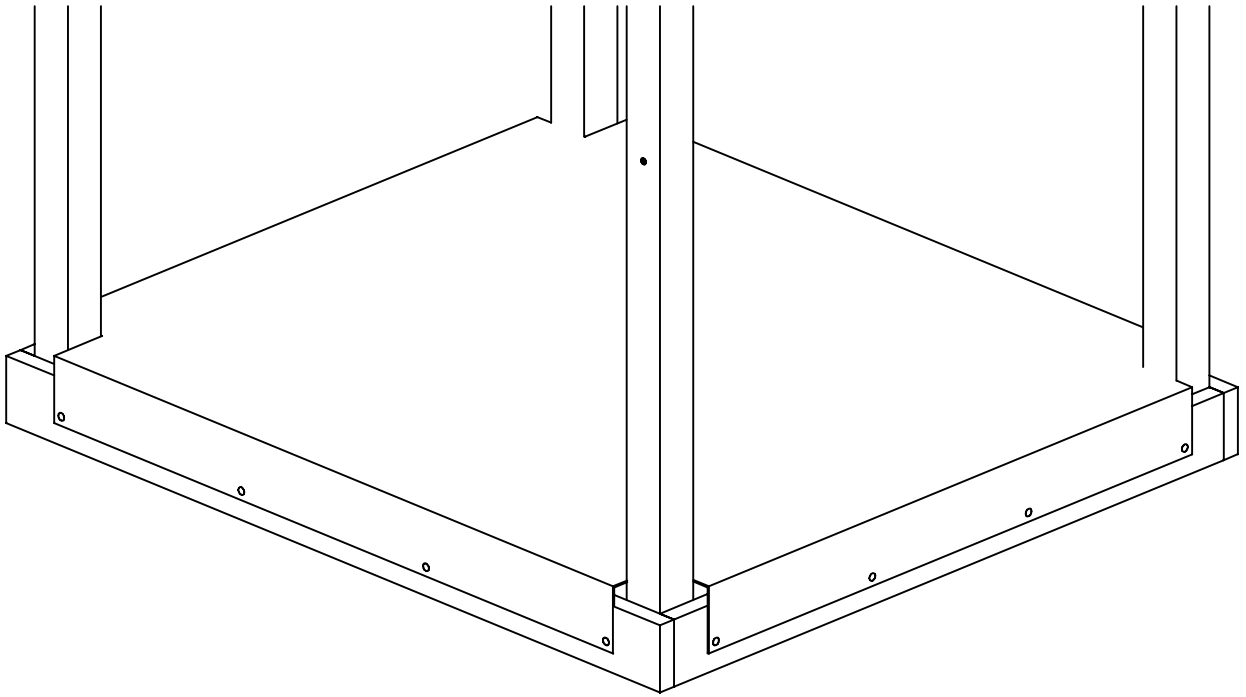

WARRANTY

Backyard Play Systems warrants the following:

1. All wood components have a Limited Lifetime Warranty.
   • Wood - Backyard Play Systems will replace treated wood which becomes structurally unfit due solely to damage caused by fungal decay or termites.

2. All non-wood components* have a three year Limited Warranty.
   ***Ropes and canopy carry a one year Limited Warranty.**

3. Installation labor has a three year Limited Warranty applicable on playsets installed by Backyard Play Systems. Labor warranty does NOT apply to Do-It-Yourself playset kits or kits installed by a third party.

Backyard Play Systems will repair, replace or pay for the affected part at our discretion. In no event shall Backyard Play Systems pay the cost of labor or installation or any other costs related thereto.

Non-residential use of the system is prohibited and will void this warranty as the system is designed for residential use only.

Conditions
The warranty is effective only when:

1. The unit has been erected in accordance with the assembly instructions.
2. The unit has been regularly and properly maintained and inspected.
3. The failure occurs when the unit is owned by the original purchaser.
4. This warranty is non-transferable
5. Backyard Play Systems has received a copy of your original proof of purchase with any claims in writing.
6. Backyard Play Systems has had reasonable opportunity during the sixty (60) days following the receipt of notification to inspect and verify the failure prior to commencement of any repair work.
7. "Significant color changes" to wood components is at the discretion of Backyard Products and require proof in the form of photographs or inspection by Backyard Play Systems.

Wooden components may have imperfections such as checks and knots. These are natural blemishes and imperfections which are inherent to wood. The imperfections not resulting in structural failure are not covered under this warranty.

Requirements
To validate your warranty it is necessary to fill out and mail in the enclosed warranty card. And also to maintain and inspect your playset regularly. Regularly is defined as once per start and end of season.

Claim Procedure
To make a claim under this warranty, you can either call 1-866-890-2211 or prepare a letter.
Please have ready the information below when you call or include the information in writing:

1. The model and size of the product.
2. A list of the part(s) for which the claim is made.
3. Proof of purchase of the Backyard Play Systems item, as shown on the original invoice.
4. Run Code, as listed on the enclosed warranty card.

Mail the above information to:
Backyard Play Systems
Attn: Customer Service
1000 Ternes Dr.
Monroe, MI 48162

WARRANTY

Please feel free to call our Consumer Help Line Toll Free

1-866-890-2211
April through October M - F 8:00 AM to 6:00 PM EST
Saturday 8:30 AM to 4:30 PM EST
November through March M - F 8:00 AM to 5:00 PM EST

No warranty is offered on the following: (1) equipment subject to abuse, negligence, improper installation, vandalism, acts of God, unauthorized alteration or attachment to equipment other than our own: or (2) equipment subjected to improper use, service or repair by customer or any third party.

To the maximum extent permitted by law, this warranty and the remedies set forth herein are exclusive and expressly in lieu of all other warranties, expressed or implied, including warranties of merchantability or fitness for a particular purpose. If Backyard Play Systems cannot disclaim or exclude implied warranties under applicable law, then to the extent possible any claims under any such implied warranties shall expire on expiration of the applicable warranty period. Some states do not allow limitations on how long an implied warranty lasts, so the above limitation may or may not apply to you. Backyard Play Systems does not assume, or authorize any person to assume for us, any other liability in connection with the sale of our products.

To the maximum extent of the law, Backyard Play Systems assumes no responsibility for incidental or consequential damages which may arise from the purchase or use of our playset or equipment. Some states do not allow the exclusion or limitation of incidental or consequential damages, so the above limitation or exclusion may not apply to you.

If any provision of this limited warranty is invalid, void or unenforceable in any instance or respect, the unenforceable provision will be severed and reformed to effect the intent of this limited warranty to the maximum extent possible, and the remaining provisions shall continue in full force and effect and shall be enforced to the full extent permitted by law.

This warranty gives you specific legal rights, and you may also have other rights which vary from state to state.

- ❑ **WARRANTY TERMS MAY VARY OUTSIDE THE U.S.A.**
- ❑ This manual is your warranty certificate. Please retain your original proof of purchase and this manual for any warranty claims.